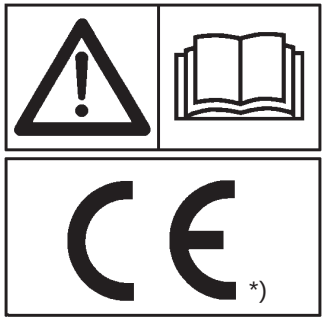

GASPARDO

MASCHIO GASPARDO S.p.A.

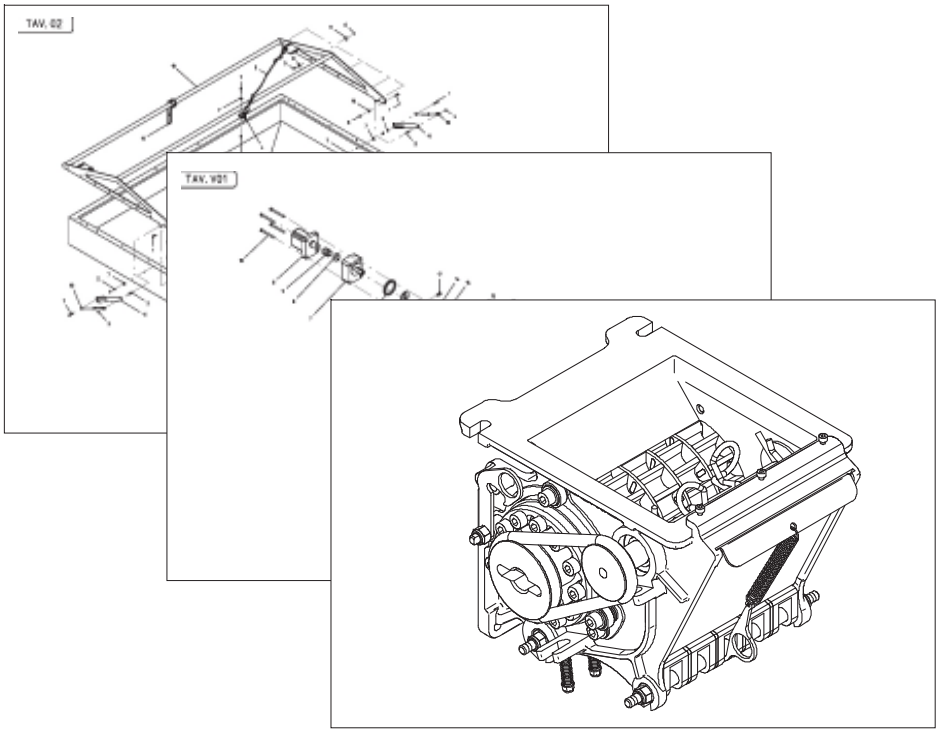

PA1

GRINTA

Cod: G19530831 02.2008

*) Valido per Paesi UE
*) Valid for EU member countries
*) Valable dans les Pays UE
*) Gilt für EU-Mitgliedsländer
*) Válido para Países UE

IT PARTI DI RICAMBIO
EN *SPARE PARTS*
DE ERSATZTEILE
FR *PIECES DÉTACHÉES*
ES PIEZAS DE REPUESTO

ITALIANO

PARTI DI RICAMBIO

Le ordinazioni delle parti di ricambio vanno fatte presso i nostri concessionari di zona e devono essere sempre corredate dalle seguenti indicazioni:

- **Tipo, modello e numero di matricola dell'attrezzatura.** Tali dati sono stampigliati nell'apposita targhetta di cui è dotata ogni attrezzatura.

- **Numero di codice della parte richiesta** rilevabile dal catalogo ricambi.

- **Descrizione del particolare e quantità richiesta.**

- **Numero della tavola.**

- **Mezzo di trasporto.** Nel caso questa voce non sia specificata, la Ditta Costruttrice, pur dedicando a questo servizio una particolare cura, non risponde di eventuali ritardi di spedizione dovuti a cause di forza maggiore.
Le spese di trasporto si intendono sempre a carico del destinatario. La merce viaggia a rischio e pericolo del committente anche se venduta franco destino.

NOTA: Il termine (**Dx**) **Destro** o (**Sx**) **Sinistro** della macchina o di parti di essa, è inteso guardando la macchina dalla parte posteriore. Le eccezioni saranno indicate.

ENGLISH

SPARE PARTS

Orders must be transmitted through our area dealers and should always include the following indications:

- ***Type, model and serial number of the machine.*** *These data are punched on the data plate with which every implement is equipped.*

- ***Code number of the required spare part.*** *This will be found in the spare parts catalogue.*

- ***Description of the part and required quantity.***

- ***Table number.***

- ***Means of dispatch.*** *If this item is not indicated, the Manufacturer, while dedicating particular care to this service, shall not be held responsible for delays in delivery caused by cases of force majeure.*
Transport expenses shall always be at the consignee's charge. The goods travel at the purchaser's risk and peril even when sold ex destination.

NOTE: *The symbols* ***(Dx) right*** *and* ***(Sx) left****, concerning the machine or single parts of it, are referred, as in the figure, to a rear view of them. Exceptions will be indicated.*

DEUTSCH

ERSATZTEILE

Die Bestellungen müssen bei unseren Gebietshändrer aufgegeben werden. Bei der Bestellung sind stets die folgenden Angaben zu machen:

- **Typ, Modell und Serien-Nummer des Geräts**. Diese Daten stehen auf dem Typenschild, mit dem jedes Gerät versehen ist.

- **Artikel Nr. der erforderlichen Ersatzteile.** Diese stehen im Ersatzteil-Katalog.

- **Beschreibung des Ersatzteils und die erforderliche Stückzahl.**

- **Tafelnummer.**

- **Versandmittel.** Wenn dieser Punkt nicht spezifiziert wird, haftet die Herstellerfirma nicht für etwaigen Lieferverzug aufgrund höherer Gewalt, auch wenn er diesen Service besonders aufmerksam abwickelt.
Die Frachtkosten gehen dagegen immer zu Lasten des Empfängers. Die Ware reist auf Gefahr und Risiko des Auftraggebers, auch wenn frei Haus Verkauft vereinbart worden ist.

N.B.: Die Merkzeichen (**Dx**) **rechts** und (**Sx**) **links** betreffen eine rückwärtige Aussicht der Maschine oder Teile von ihr (siehe Bild). Ausnahmen werden gezeigt.

FRANÇAIS

PIECES DÈTACHÈES

Les ordres doivent être effectués auprés de nos concessionaires de zone en précisant les indications suivantes:

- ***Type, modéle et numéro de série de la machine****. Ces données sont gravées sur la plaque d'identification de chaque outil.*

- ***Numéro de code de la piéce détachée*** *indiqué sur le catalogue des piéces détachées.*

- ***Description de la piéce et quantité requise****.*

- ***Numéro de plan****.*

- ***Moyen d'expédition****. Si cette rubrique n'est pas indiquée, le Constructeur, bien que soucieux de ce service, ne répond pas des retards d'expédition pour des causes de force majeure.*
Les frais de transport sont toujours à la charge du destinataire. La marchandise voyage aux risques et périls de l'acheteur même si vendue franco de port.

N.B.: *Les références* ***(Dx) droit*** *et* ***(Sx) gauche*** *de la machine ou des parties de la même, est entendue, comme de la figure, en regardant la machine de derriere dans le sens de marche.*

ESPAÑOL

RESPUESTOS

Los pedidos han de efectuarse en nuestros consesionarios de zona y deben incluir siempre las siguientes indicaciones:

- **Tipo, modelo y número de matrícula del equipo**. Dichos datos están impresos en la relativa placa presente en el equipo.

- **Número de código de la parte requerida** presente en el catálogo respuestos.

- **Descripcíon de la pieza y cantidad requerida**.

- **Numero de illustración**.

- **Medio de transporte**. En caso que este ítem no esté especificado, el Fabricante, aún prestando la debidas consideraciones para este aspecto, no responde por eventuales retardos de env'o debidos a causas de fuerza mayor.
Los gastos de transporte se consideran siempre a cargo del destinatario. La mercandería viaja bajo riesgo y peligro del comprador, incluso cuando se vende franco destino.

N.B.: La refencia (**Dx**) **derecha** o (**Sx**) **izquierda** de la máquina o de sus componentes, se entiende, como en la figura, mirando la máquina por la parte trasera. Se indicarán las excepciones.

Nr. Tav.	Descrizione - Description	Pag.
TAV. 010	Telaio	4
TAV. 021	Tramoggia	6
TAV. 031	Copritramoggia	8
TAV. 041	Ruota di trasmissione	10
TAV. 061	Supporti gruppo distribuzione	14
TAV. 070	Cambio DESMO	16
TAV. 081	Dosatore GRINTA	18
TAV. 270	Gestione elettrica “GENIUS”	20
TAV. 091	Tubo di raccordo	22
TAV. 101	Soffiante con Imp. oleod. dipendente da trattore	24
TAV. 110	Motore unidirezionale dx cil.5,9 kv-1U	26
TAV. 121	Imp. oleod. indipendente da trattore - P.d.P. anteriore	28
TAV. 131	Imp. oleod. indipendente da trattore - P.d.P. posteriore	30
TAV. 140	Set luci anteriori	32
DISTRIBUZIONE SEME - SEED DISTRIBUTION		
TAV. 151	Telaio supporto elementi	34
TAV. 161	Assolcatori a stivaletto	36
TAV. 171	Assolcatori dischi	38
TAV. 180	Pressione assolcatori	40
TAV. 190	Impianto oleodinamico pressione assolcatori	42
TAV. 200	Segnafile	44
TAV. 210	Erpice copriseme	48
TAV. 220	Tracciasentieri posteriore	5
DISTRIBUZIONE CONCIME - FERTILIZER DISTRINUBION		
TAV. 230	MTI XL / SI XL	52
TAV. 240	MAESTRA	54
TAV. 250	MTI / SI	56
TAV. 260	MAGICA	58

TAV. 011

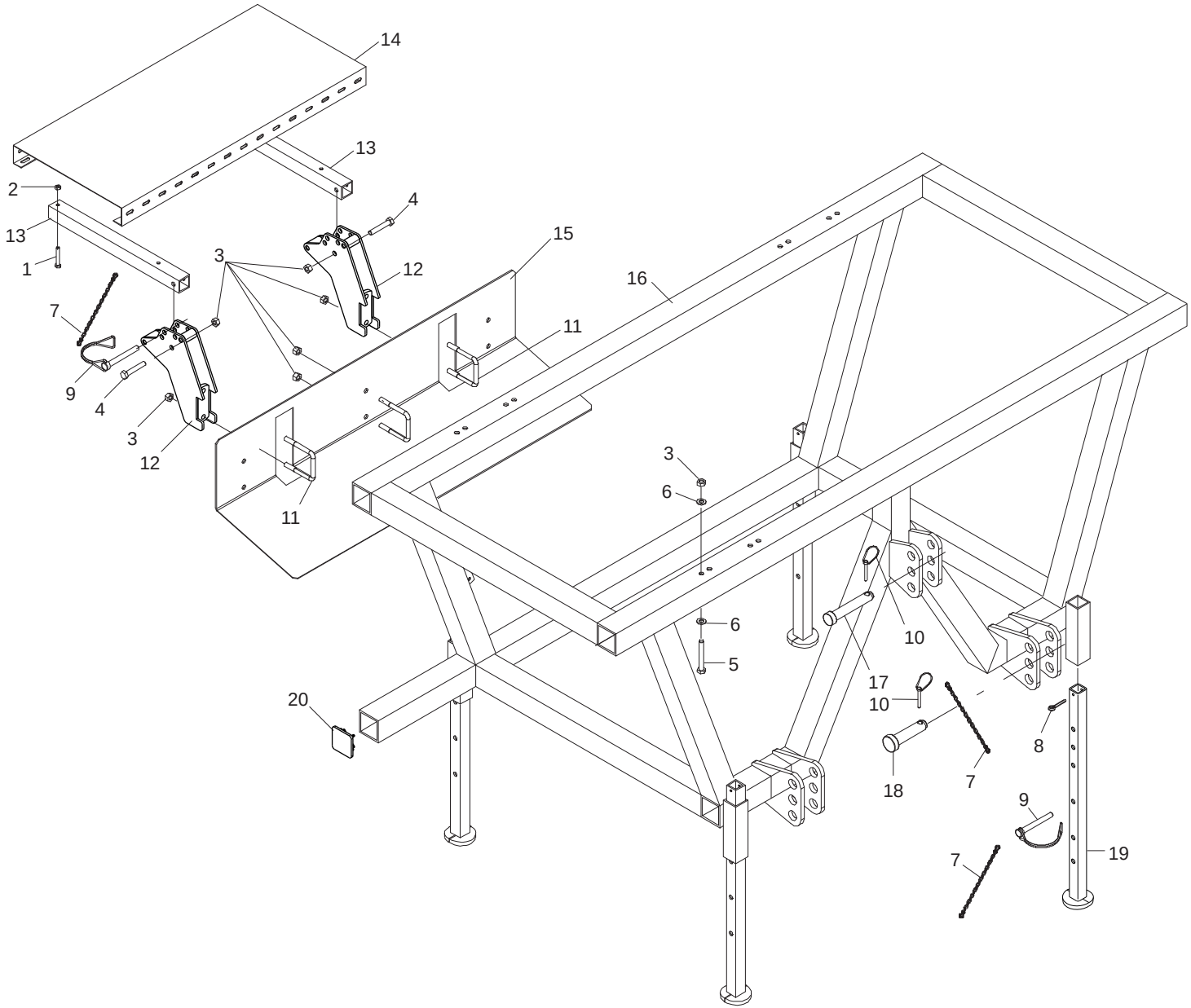

GASPARDO

cod. G19530831

TELAIO

TAV. 011

Pos.	Cod.	Descrizione	Description	Description	Benennung	Descripcion
1	F01020075	VITE M8X1,25X 55 U5737 8.8 ZN	BOLT 8 X55 5737 8.8 GALVANIZED	VIS 8 X55 5737 8.8 ZN	SCHRAUBE 8 X55 5737 8.8 ZN	TORNILLO 8 X55 5737 8.8 ZN
2	F01260043	DADO FLANG.M8 D6923 8.8 ZN	FLANGE NUT M8 DIN 6923 8.8 GAL	ECROU BRIDE .M8 DIN 6923 8.8 Z	GEFLANSCHTE MUTTER M8 DIN6923	TUERCA BRIDA M8 DIN 6923 8.8 Z
3	F01220059	DADO M14X 1,5 D980 8 ZN	NUT M14X 1,5 D980 8 ZB	ECROU M14X 1,5 D980 8 ZB	MUTTER M14X 1,5 D980 8 ZB	TUERCA M14X 1,5 D980 8 ZB
4	F01020164	VITE M12X1,75X70 U5737 8.8 ZN	BOLT M12X1,75X70 U5737 8.8 ZB	VIS M12X1,75X70 U5737 8.8 ZB	SCHR.M12X1,75X70 U5737 8.8 ZB	TORN.M12X1,75X70 U5737 8.8 ZB
5	F01020170	VITE M12X1,75X100 5737 8.8 ZN	BOLT M 12X100	VIS M 12X100	SCHRAUBE M 12X100	TORNILLO M 12X100
6	F01420072	ROS.M12 13X 48X2,5 U6593 IX				
7	G13812311	CATENELLA CON MOSCHETTONE	CHAIN WITH SPRING CATCH	CHAINETTE AVEC MOUSQUETON	KETTE MIT KARABINERHAKEN	CADENA CON GANCHO
8	F02200246	COPIGLIA 6X 45 U1336 ZN	SPLIT PIN 6 X45 1336 GALVAN.	GOUPILLE 6 X45 1336 ZN	SPLINT 6 X45 1336 ZN	PASADOR 6 X45 1336 ZN
9	F02200584	SPINA SICUR. D. 12X70 ZN	GALVAN. SAFETY PIN D.12X70	GOUPILLE DE S+CURIT+ D.12X70 Z	SCHERSTIFT D.12X70 ZN	PASADOR DE SEGURIDAD D 12X70 Z
10	F02200507	SPINA SCATTO D. 9 B/83 ZN	SNAP PIN D 9 B/83	FICHE A DETENTE D 9 B/83	EINRASTSTIFT D 9 B/83	CLAVIJA DE MUELLE D 9 B/83
11	F20110745	CAV.Q.M12X1,75X 35 83X 96 ZN	U-BOLT M12 X PIPE 70X70	CAVALIER M12 POUR TUBE 70X70	BsGELBOLZEN M12 FsR ROHR 70X70	PERNO EN U M12 X TUBO 70X70
12	G17310550	SUPPORTO PEDANA				
13	G17310560	TUBO PORTA PEDANA				
14	G16016320	PEDANA 400X900X58 ZN				
15	G17310571	PROTEZIONE DISTRIBUTORE				
16	G17310510	TELAIO PA				
17	F20100063	PERNO D25 L91 C40 ZN	PIN GASPARDO D25 L113 C40	PIVOT GASPARDO D25 L113 C40	BOLZEN GASPARDO D25 L113 C40	PERNO GASPARDO D25 L113 C40
18	F20100078	PERNO D28 L93 C43 ZN	PIN D.28	GOUJON D.28	BOLZEN D.28	PERNO D.28
19	G10710032	PUNTELLO	PROP	ETRESILLON	STsTZE	PUNTAL
20	F05100156	TAPPO PER TUBO 70X70	PLUG PIPE 70X70	BOUCHON TUBE 70X70	ROHRPFROPFEN 70X70	TAPN TUBO 70X70 D

TAV. 021

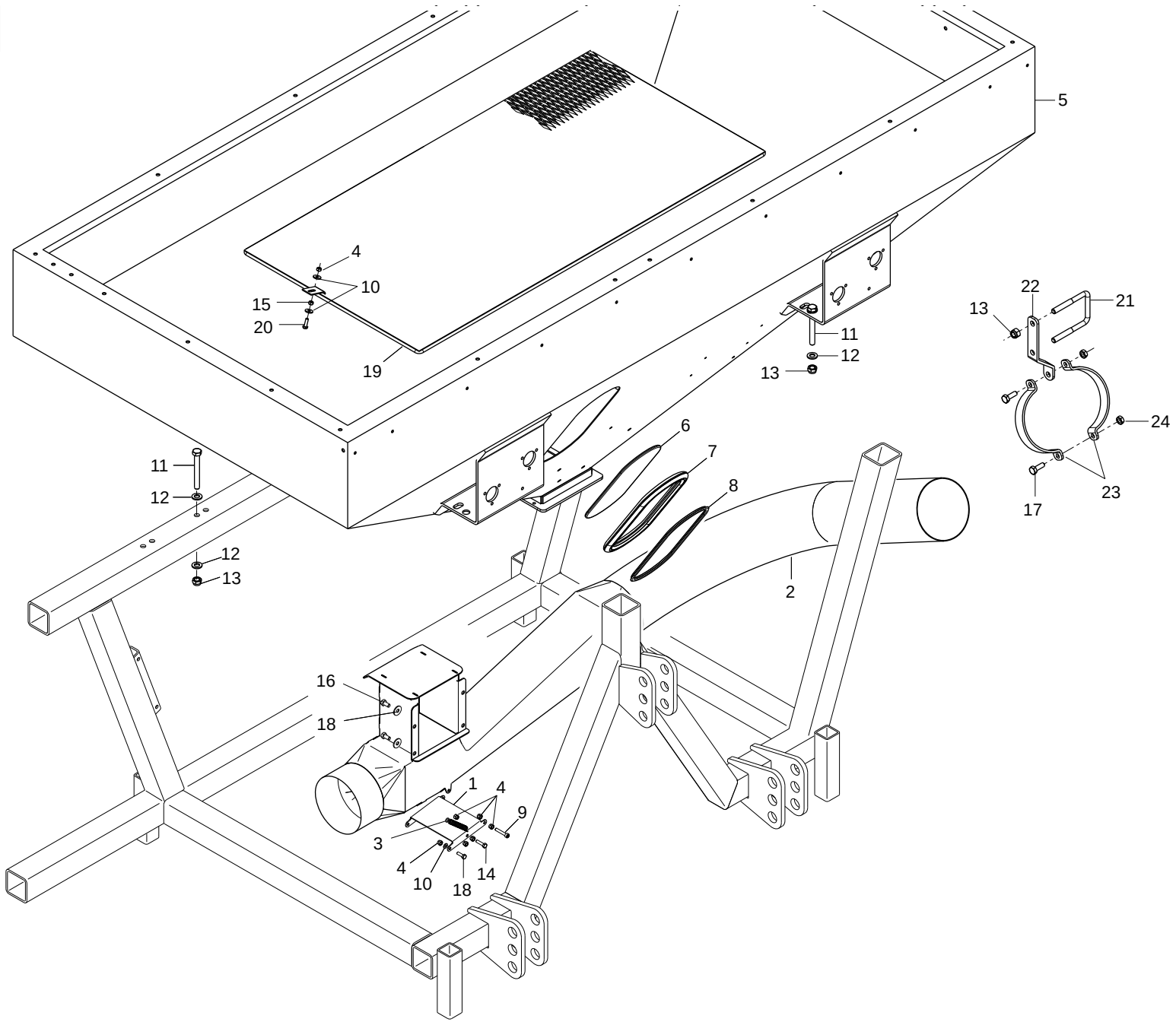

GASPARDO

TRAMOGGIA

TAV. 021

Pos.	Cod.	Descrizione	Description	Description	Benennung	Descripcion
1	G17321820	LAMA DI CHIUSURA				
2	G17321750	ASS.TUBO DI LANCIO PA1 D.150				
3	G65337035	MOLLA TENDICATENA RUOTA DP	CHAIN TIGHTENER SPRING DP	RESSORT TENDEUR DE CHAINE ROUE	FEDER KETTENSPANNER RAD DP	MUELLE TENSOR DE LA CADENA RUE
4	F01230024	DADO M 6X 1 D982 A2 IX	NORM.SELF-LOCKING NUT 10	ECROU AUTOB.NOR.10	SELBSTSP. MUTTER NOR. 10	TUERCA AUTOB. NOR. 10
5	G17320071	SERBATOIO SEME PA1				
6	G16021080	VETRO CONTROLLO LIVELLO SEMI	SEED LEVEL CHECKING GLASS	VITRE CONTROLE NIV. GRAINES	KONTROLLFENSTER SAMENSTAND	VIDRIO CONTROL NIVEL SEMILLAS
7	F03011155	GUARNIZIONE VETRO TRAMOGGIA	GLASS SEAL	GARNITURE VERRE	GLASDICHTUNG	JUNTA VIDRIO
8	G68005092	TENDITORE GUARNIZIONE	TURNBUCKLE GASKET	TENDEUR GARNITURE	DICHTUNGSSPANNER	TENSOR JUNTA
9	F01040066	VITE M 6X 1X35 U5931 8.8 ZN	BOLT 6 X35 5931 8.G GALVANIZ.	VIS 6 X35 5931 8.G ZN	SCHRAUBE 6 X35 5931 8.G ZN	TORNILLO 6 X35 5931 8.G ZN
10	F01420038	ROS.M6 6,4X 18X 2 U6593 IX	WASHER M6 6,4X18X2 U6593 IX	RONDELLE M6 6,4X18X2 U6593 IX	SCHEIBE M6 6,4X18X2 U6593 IX	ARANDELA M6 6,4X18X2 U6593 IX
11	F01020170	VITE M12X1,75X100 5737 8.8 ZN	BOLT M 12X100	VIS M 12X100	SCHRAUBE M 12X100	TORNILLO M 12X100
12	F01420072	ROS.M12 13X 48X2,5 U6593 IX				
13	F01230059	DADO M12X1,75 D982 8 ZN	NUT M12X1,75 D982 8 ZB	ECRO.M12X1,75 D982 8 ZB	MUTT.M12X1,75 D982 8 ZB	TUER.M12X1,75 D982 8 ZB
14	F01020443	VITE M 8X1,25X25 U5739 A2 IX	SCREW M8X1.25X25 U5739 A2 IX	VIS M8X1.25X25 U5739 A2 IX	SCHRAUBE M8X1.25X25 5739 A2 IX	TORNILLO M8X1.25X25 5739 A2 IX
15	F01200233	DADO M 6X 1 U5588 A2 IX	NUT M 6X 1 U5588 IX	ECROU M 6X 1 U5588 I	MUTTER M 6X 1 U5588	TUERCA M 6X 1 U5588
16	F01020434	VITE M 8X1,25X16 U5739 A2 IX	BOLT M 8X1,25X 16 U5739 8.8 IX	VIS M 8X1,25X 16 U5739 8.8 IX	SCHRAUBE M 8X1,25X 16 U5739 8.	TORNIL. M 8X1,25X 16 U5739 8.8
17	F01020476	VITE M10X 1,5X30 U5739 8.8 ZN	BOLT M 10X30	VIS M 10X30	SCHRAUBE M 10X30	TORNILLO M 10X30
18	F01420047	ROS.M8 8,4X 24X 2 U6593 IX	WASHER M8 8,4X24X2 U6593 IX	RONDELLE M8 8,4X24X2 U6593 IX	SCHEIBE M8 8,4X24X2 U6593 IX	ARANDELA M8 8,4X24X2 U6593 IX
19	G17321850	ASS.GRIGLIA				
20	F01020420	VIT.M 6X 1X 20 U5739 A2 IX				
21	F20110745	CAV.Q.M12X1,75X 35 83X 96 ZN	U-BOLT M12 X PIPE 70X70	CAVALIER M12 POUR TUBE 70X70	BsGELBOLZEN M12 FsR ROHR 70X70	PERNO EN U M12 X TUBO 70X70
22	G17312540	SUPPORTO TUBO				
23	G16124400	FASCETTA TUBO D.150 ZN				
24	F01220033	DADO M10X 1,5 D980 8 ZN	NUT M10X 1,5 D980 8 ZB	ECRO.M10X 1,5 D980 8 ZB	MUTT.M10X 1,5 D980 8 ZB	TUER.M10X 1,5 D980 8 ZB

TAV. 031

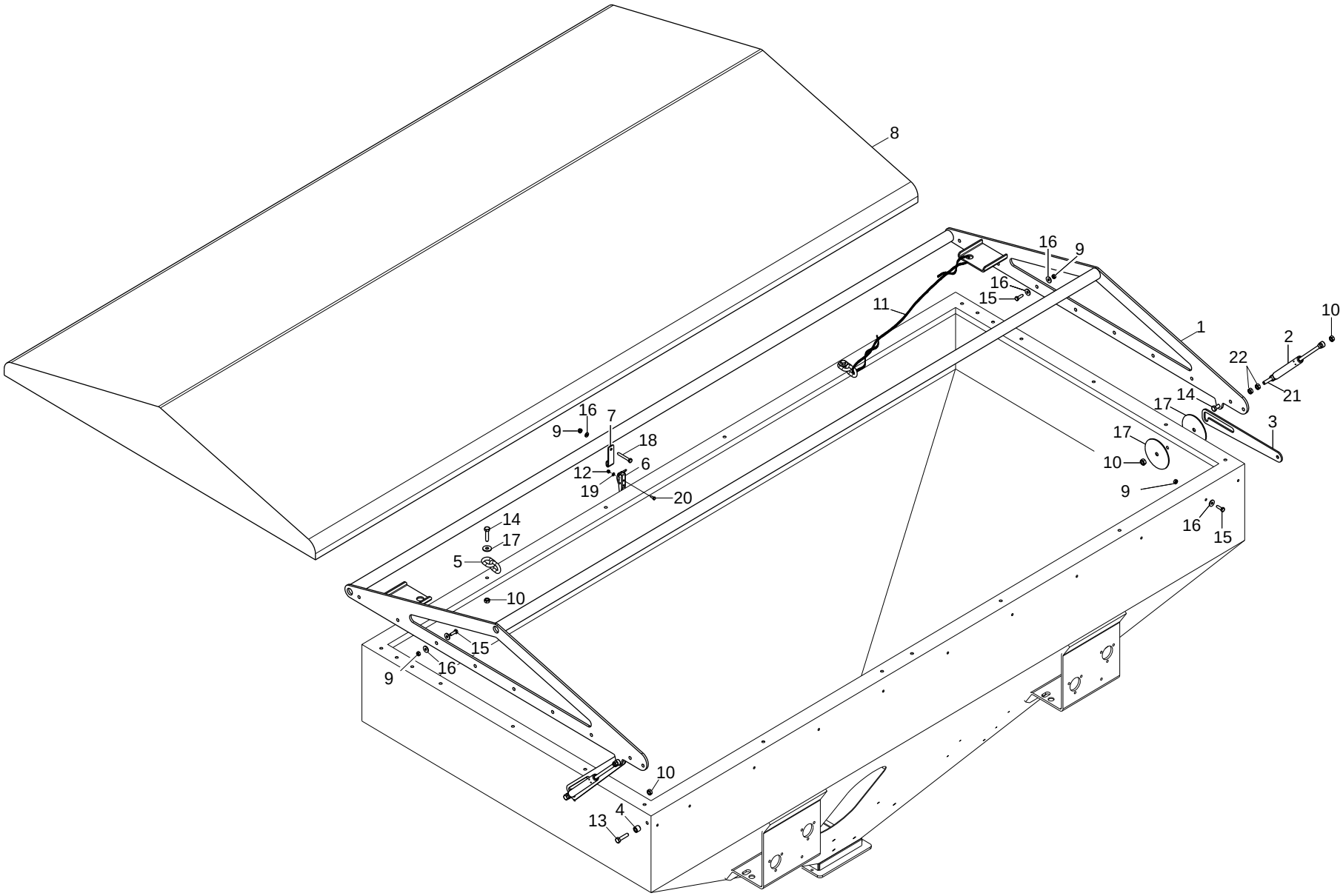

GASPARDO

cod. G19530831

COPRITRAMOGGIA

TAV. 031

Pos.	Cod.	Descrizione	Description	Description	Benennung	Descripcion
1	G17320110	TELAIO COPRITRAMOGGIA				
2	F03151166	MOLLA A GAS 19828070 MULT.	GAS SPRING	RESSORT A GAZ	GASFEDER	MUELLE DE GAS
3	G17320120	FERMO COPRITRAMOGGIA	HOPPER COVER STOP	ARR-T COUVRE-TR+MIE	SPERRE TRICHTERABDECKUNG	TOPE CUBIERTA TOLVA
4	G18801880	BOCCOLA 8,25 X15 X13 ZN	BUSHING 8,25 X15 X13 ZN	BOITE 8,25 X15 X13 ZN	BsCHSE 8,25 X15 X13 ZN	CASQUILLO 8,25 X15 X13 ZN
5	G22270190	CATENA AGG.MOLLA SEGNAF. SP	CHAIN ADDITIONAL SPRING ROWMAR	CHAINE FIXATION RESS. TRACEUR	KETTE FEDERANSCHLUSS SPURREISS	CADENA CONEX. MUELLE MARC. FIL
6	G16021040	LEVA CHIUSURA	CLOSURE LEVER	LEVIER DE FERMETURE	ABSCHLUSSHEBEL	PALANCA DE CIERRE
7	G17320340	ATTACCO COPERCHIO				
8	G17320160	TELO COPRITRAMOGGIA PA1 PA2				
9	F01230024	DADO M 6X 1 D982 A2 IX	NORM.SELF-LOCKING NUT 10	ECROU AUTOB.NOR.10	SELBSTSP. MUTTER NOR. 10	TUERCA AUTOB. NOR. 10
10	F01230032	DADO M 8X1,25 D982 A2 IX	NUT M 8X1,25 D982 A2 IX	ECROU M 8X1,25 D982 A2 IX	MUTTER M 8X1,25 D982 A2 I	TUERCA M 8X1,25 D982 A2 I
11	G10111530	CORDA POLIPROPILENE 12X2400				
12	F01230016	DADO M 4X 0,7 D982 8 ZN	NORM.SELF-LOCKING NUT 4 GALVAN	ECROU AUTOB.NOR.4 ZN	SELBSTSP. MUTTER NOR. 4 ZN	TUERCA AUTOB. NOR. 4 ZN
13	F01020449	VITE M 8X1,25X35 U5739 8.8 ZN	BOLT M 8X35	VIS M 8X35	SCHRAUBE M 8X35	TORNILLO M 8X35
14	F01020443	VITE M 8X1,25X25 U5739 A2 IX	SCREW M8X1.25X25 U5739 A2 IX	VIS M8X1.25X25 U5739 A2 IX	SCHRAUBE M8X1.25X25 5739 A2 IX	TORNILLO M8X1.25X25 5739 A2 IX
15	F01020420	VIT.M 6X 1X 20 U5739 A2 IX				
16	F01420038	ROS.M6 6,4X 18X 2 U6593 IX	WASHER M6 6,4X18X2 U6593 IX	RONDELLE M6 6,4X18X2 U6593 IX	SCHEIBE M6 6,4X18X2 U6593 IX	ARANDELA M6 6,4X18X2 U6593 IX
17	F01420047	ROS.M8 8,4X 24X 2 U6593 IX	WASHER M8 8,4X24X2 U6593 IX	RONDELLE M8 8,4X24X2 U6593 IX	SCHEIBE M8 8,4X24X2 U6593 IX	ARANDELA M8 8,4X24X2 U6593 IX
18	F01020041	VITE M 6X 1X 45 U5737 8.8 ZN	BOLT 6 X45 5737 8.G GALVANIZED	VIS 6 X45 5737 8.G ZN	SCHRAUBE 6 X45 5737 8.G ZN	TORNILLO 6 X45 5737 8.G ZN
19	F01410011	ROS.M4 4,3X 9X0,8 U6592 ZN	PLANE WASHER 4,5X 9 6592	RONDELLE 4,5X 9 6592	SCHEIBE 4,5X 9 6592	ARANDELA 4,5X 9 6592
20	F01020363	VITE M 4X0,7X 16 U5739 8.8 ZN	BOLT 4X16 5739 8.G GALVANIZED	VIS 4X16 5739 8.G ZN	SCHRAUBE 4X16 5739 8.G ZN	TORNILLO 4X16 5739 8.G ZN
21	F01020071	VIT.M 8X1,25X 45 U5737 A2 IX				
22	F01200245	DADO M 8X1,25 U5588 A2 IX	NUT M 8X1,25 U5588 6.8 IX	ECROU M 8X1,25 U5588 6.8 I	MUTTER M 8X1,25 U5588 6.8	TUERCA M 8X1,25 U5588 6.8

TAV. 041

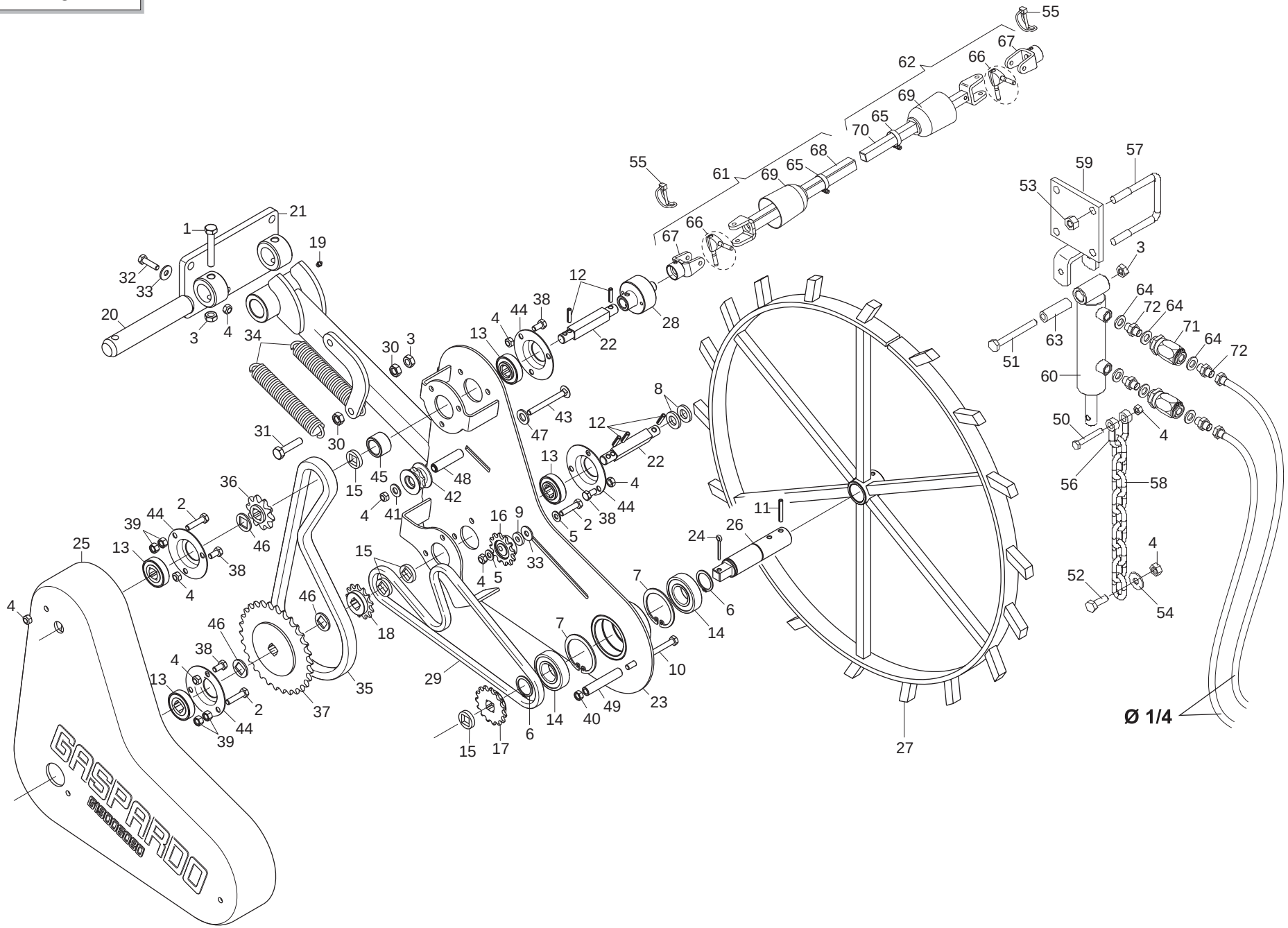

GASPARDO

cod. G19530831

RUOTA DI TRASMISSIONE

TAV. 041

Pos.	Cod.	Descrizione	Description	Description	Benennung	Descripcion
1	F01020120	VIT.M10X 1,5X 65 U5737 8.8 ZN	BOLT M 10X65	VIS M 10X65	SCHRAUBE M 10X65	TORNILLO M 10X65
2	F01020063	VITE M8X1,25X 35 U5737 8.8 ZN	BOLT 8 X35 5737 8.G GALVANIZED	VIS 8 X35 5737 8.G ZN	SCHRAUBE 8 X35 5737 8.G ZN	TORNILLO 8 X35 5737 8.G ZN
3	F01220033	DADO M10X 1,5 D980 8 ZN	NUT M10X 1,5 D980 8 ZB	ECRO.M10X 1,5 D980 8 ZB	MUTT.M10X 1,5 D980 8 ZB	TUER.M10X 1,5 D980 8 ZB
4	F01220022	DADO M 8X1,25 D980 8 ZN	SELF LOCKING NUT M8X1,25 980V	ECROU AUTOBL. M8X1,25 980-V	SELBSTSP.MUTT. M8X1,25 980-V	DADO AUTOBL. M8X1,25 980-V
5	F01410051	ROS.M8 8,4X 17X1,6 U6592 ZN	PLANE WASHER D.8	RONDELLE D.8	SCHEIBE D.8	ARANDELA D.8
6	F02050112	ANELLO E. DE 30X 1,5 U7435 C70	SEEGER RING 30X 1,5 U7435 C70	SEEGER E. 30 X 1,5 U7435 C70	SEEGERING E. 30X 1,5 U7435 C70	ANILLO E. 30 X 1,5 U7435 C70
7	F02050392	ANELLO E. DI 62X 2 U7437 C70	SEEGER RING E. 62X 2 U7437 C70	SEEGER E. 62X 2 U7437 C70	SEEGERING E. 62X 2 U7437 C70	ANILLO E. 62 X 2 U7437 C70
8	G20970118	RONDELLA 28X4X15,5	WASHER 28X4X15-5	RONDELLE 28X4X15-5	UNTERLEGSCHEIBE 28X4X15-5	ARANDELA 28X4X15-5
9	G20970104	RONDELLA 21X4X8,5	WASHER 21X4X8-5	RONDELLE 21X4X8-5	UNTERLEGSCHEIBE 21X4X8-5	ARANDELA 21X4X8-5
10	F01020090	VITE M8X1,25X100 U5737 8.8 ZN	BOLT 8 X100 5737 8.G GALVANIZ.	VIS 8 X100 5737 8.G ZN	SCHRAUBE 8 X100 5737 8.G ZN	TORNILLO 8 X100 5737 8.G ZN
11	F02100121	SPINA E.P. 6X 40 U6873 C70 BR	ELASTIC PIN 6X40	GOUJON ELASTIQUE 6X40	SPANNHUELSE 6X40	PASADOR 6X40
12	F02100109	SPINA E.P. 6X 24 U6873 C70 BR	PIN EL. .6 X24 DIN 1481	FICHE EL. 6 X24 DIN 1481	SPANNSTIFT 6 X24 DIN 1481	CLAVIJA EL.6 X24 DIN 1481
13	G10538351	CUSCINETTO F.Q. RIBASSATO	SQUARE HOLE BEARING	PALIER TROU CARRE	LAGER VIERKANTLOCH	COJINETE ORIFICIO CUADRADO
14	F04010174	CUSC.D30 D62 B16 6206 2RS	BEARING 6206 2RS	PALIER 6206 2RS	LAGER 6206 2RS	COJINETE 6206 2RS
15	G66248218	RONDELLA DISTAN.SPAND.	MAN. SPR. SPACER WASHER	RONDELLE ENTRETOISE EP. ENGRAI	ABSTANDSCHEIBE DsNGERSTREUER	ARANDELA DISTAN.ABONAD.
16	G16930550	PIGNONE TENDICATENA CONC.COMPL	COMPL. FERTILIS. CHAIN EXTENDE	PIGNON TENDEUR DE CHAINE FERTI	RITZEL KETTENSPANNER D_NGER KO	PIÐON TIRA CADENA ABONO COMPL.
17	G22250028	PIGNONE Z-15 SV	Z-15 PINION SV	PIGNON Z-15 SV	RITZEL Z-15 SV	PI¾N Z-15 SV P
18	G15131050	PIGNONE Z13	Z-13 PINION	PIGNON Z13	RITZEL Z-13	PI¾N Z13 P
19	F01100011	ING.M 6X1 7663-A 9SMNPB28 ZN	SPHERE NIPPLE M6X1/A	GRAISSEUR A BILLES M6X1/A	KUGELFETTBsCHSE M6X1/A	ENGRAS. DE ESFERAS M6X1/A
20	G16113360	SPINA 30X180	PIN 30X180	BROCHE 30X180	STIFT 30X180	CLAVIJA 30X180
21	G17330060	SUPPORTO RUOTA TRASM.				
22	G17330530	ASSE TRASMISSIONE				
23	G17330471	ASS.SUPPORTO TRASMISSIONE				
24	F02200194	COPIGLIA 4X 25 U1336 ZN	SPLIT PIN 4 X25 1336 GALVAN.	GOUPILLE 4 X25 1336 ZN	SPLINT 4 X25 1336 ZN	PASADOR 4 X25 1336 ZN
25	G19006080	CARTER TRASMISSIONE PA				
26	G16030511	ALBERO RUOTA TRASMISSIONE ZN	GALVAN. DRIVE-WHEEL SHAFT	ARBRE ROUE TRANSMISSION ZN	ANTRIEBSRADWELLE	EJE RUEDA TRANSMISIN ZN A
27	G16030520	RUOTA DI TRASMISSIONE	TRANSMISSION WHEEL	ROUE ENTRAINEMENT	ANTRIEBSRAD	RUEDA DE TRANSMISIN R
28	G17330030	DISINNESTO RUOTA LIBERA PE-DP	PE-DP B451FREE WHEELING RELEAS	D+BRAYAGE ROUE LIBRE PE-DP	ABKUPPLUNG FREILAUFRAD PE-DP	DESENGRANE RUEDA LIBRE PE-DP
29	F06080034	CATENA 1/2 ISO 083 68 MAGLIE	CHAIN.1/2 ISO 083 68 LINKS	TR. CH.1/2 ISO 083 68 MAILLES	KETTENLZNGE 1/2 ISO 083 68 GL	TRECHO CADENA 1/2ISO 083 68 E
30	F01200270	DADO M10X 1,5 U5588 6.8 ZN	NUT M10	ECROU M10	MUTTER M10	DADO M10
31	F01020484	VITE M10X 1,5X45 U5739 8.8 ZN	BOLT 10X45 5739 8.G GALVANIZED	VIS 10X45 5739 8.G ZN	SCHRAUBE 10X45 5739 8.G ZN	TORNILLO 10X45 5739 8.G ZN
32	F01020445	VIT.M 8X1,25X 30 U5739 8.8 ZN	BOLT M 8X30	VIS M 8X30	SCHRAUBE M 8X30	TORNILLO M 8X30
33	F01420048	ROS.M8 8,4X 24X 2 U6593 ZN	PLANE WASHER D.8	RONDELLE D.8	SCHEIBE D.8	ARANDELA D.8
34	G18903540	MOLLA TRAZIONE SCARPETTE	PLANTER SHOE TRACTION SPRING	RESSORT TRACTION SABOTS	ZUGFEDER SZSCHAREN	MUELLE TRACCIN GUA APOYO AR
35	F06080232	CATENA 5/8 ISO 10B 58 MAGLIE	ISO 10B-1 CHAIN LINK - 58-LINK	MAILLE CHAINE ISO 10B-1 58 MAI	KETTENRING ISO 10B-1 58 GLIEDE	ESLABN CADENA ISO 10B-1 58 ESL
36	G22220113	INGRANAGGIO Z-10 FERRO	GEAR Z-10 IRON	ENGRENAGE Z-10 FER	ZAHNRAD Z-10 EISEN	ENGRANAJE Z-10 HIERRO
37	G16630430	PIGNONE Z-30 ZN.	PINION Z-30 ZN.	PIGNON Z-30 ZN.	RITZE Z-30 ZN.	PINION Z-30 ZN.
38	F01020432	VITE M 8X1,25X16 U5739 8.8 ZN	BOLT M 8X16	VIS M 8X16	SCHRAUBE M 8X16	TORNILLO M 8X16
39	F01200035	DADO M 8X1,25 U5587 6.8 ZN	NUT M 8X1,25 U5587 6.8 ZB	ECROU M 8X1,25 U5587 6.8 ZB	MUTT.M 8X1,25 U5587 6.8 ZB	TUER. M 8X1,25 U5587 6.8 ZB
40	F01200244	DADO M 8X1,25 U5588 6.8 ZN	NUT M8	ECROU M8	MUTTER M8	DADO M8
41	F01410064	ROS.M10 10,5X 20X 2 U6592 ZN	WASHER 10,5X21	RONDELLE 10,5X21	SCHEIBE 10,5X21	ARANDELA 10,5X21
42	G19005070	INGRANAGGIO TENDICATENA Z8	CHAIN TIGHTENER GEAR	ENGRENAGE TENDEUR DE CHAINE	KETTENSPANNER ZAHNRAD	ENGRANAJE TENSOR DE LA CADENA
43	F01060052	BUL.M 8X1,25X 80 U5732 4.6 ZN	BOLT 8 X80 5732 4.6 GALVANIZ.	VIS 8 X80 5732 4.6 ZN	SCHRAUBE 8 X80 5732 4.6 ZN	TORNILLO 8x80 5732 4 6 ZN
44	G22230094	SUPPORTO CUSCINETTO	BEARING SUPPORT	SUPPORT PALIER	LAGERBsCHSE	SOPORTE COJINETE
45	G22500018	BOCCOLA PERNO EST.CILINDRO	BUSHING CYLIND. OUTER PIN	BOITE PIVOT EXT. CYLINDRE	BsCHSE AUSSENBOLZEN ZYLINDER	CASQUILLO ESPIGA EXT. CILINDRO
46	G18701650	RONDELLA FORO QUADRO ZN	WASHER 16,5X30X2,5 ZN	RONDELLE 16,5X30X2,5 ZN	UNTERLEGSCHEIBE 16,5X30X2,5 ZN	ARANDELA 16,5X30X2,5 ZN
47	F01410076	ROS.M12 13X 24X2,5 U6592 ZN	PLANE WASHER D12 UNI 6592 ZN	RONDELLE D12 UNI 6592 ZN	SCHEIBE D12 UNI 6592 ZN	ARANDELA D12 UNI 6592 ZN
48	G18803170	BOCCOLA 8,1 X14 X59,2 IX				
49	G18803210	BOCCOLA 8,1 X14 X74,5 ZN				
50	F01020075	VITE M8X1,25X 55 U5737 8.8 ZN	BOLT 8 X55 5737 8.8 GALVANIZED	VIS 8 X55 5737 8.8 ZN	SCHRAUBE 8 X55 5737 8.8 ZN	TORNILLO 8 X55 5737 8.8 ZN
51	F01020130	VITE M10X 1,5X90 U5737 8.8 ZN	BOLT M 10X90	VIS M 10X90	SCHRAUBE M 10X90	TORNILLO M 10X90
52	F01020449	VITE M 8X1,25X35 U5739 8.8 ZN	BOLT M 8X35	VIS M 8X35	SCHRAUBE M 8X35	TORNILLO M 8X35
53	F01220048	DADO M12X1,75 D980 8 ZN	SELF LOCKING NUT M12X1,75 980V	ECROU AUTOBL. M12X1,75 980-V	SIEHE 00553312	DADO AUTOBL. M12X1,75 980-V
54	F01420060	ROS.M10 10,5X 30X2,5 U6593 ZN	WASHER 10,5X30	RONDELLE 10,5X30	SCHEIBE 10,5X30	ARANDELA 10,5X30
55	F02200595	SPINOTTO X INGRANAGGIO	PIN	BROCHE	BOLZEN	CLAVIJA

TAV. 041

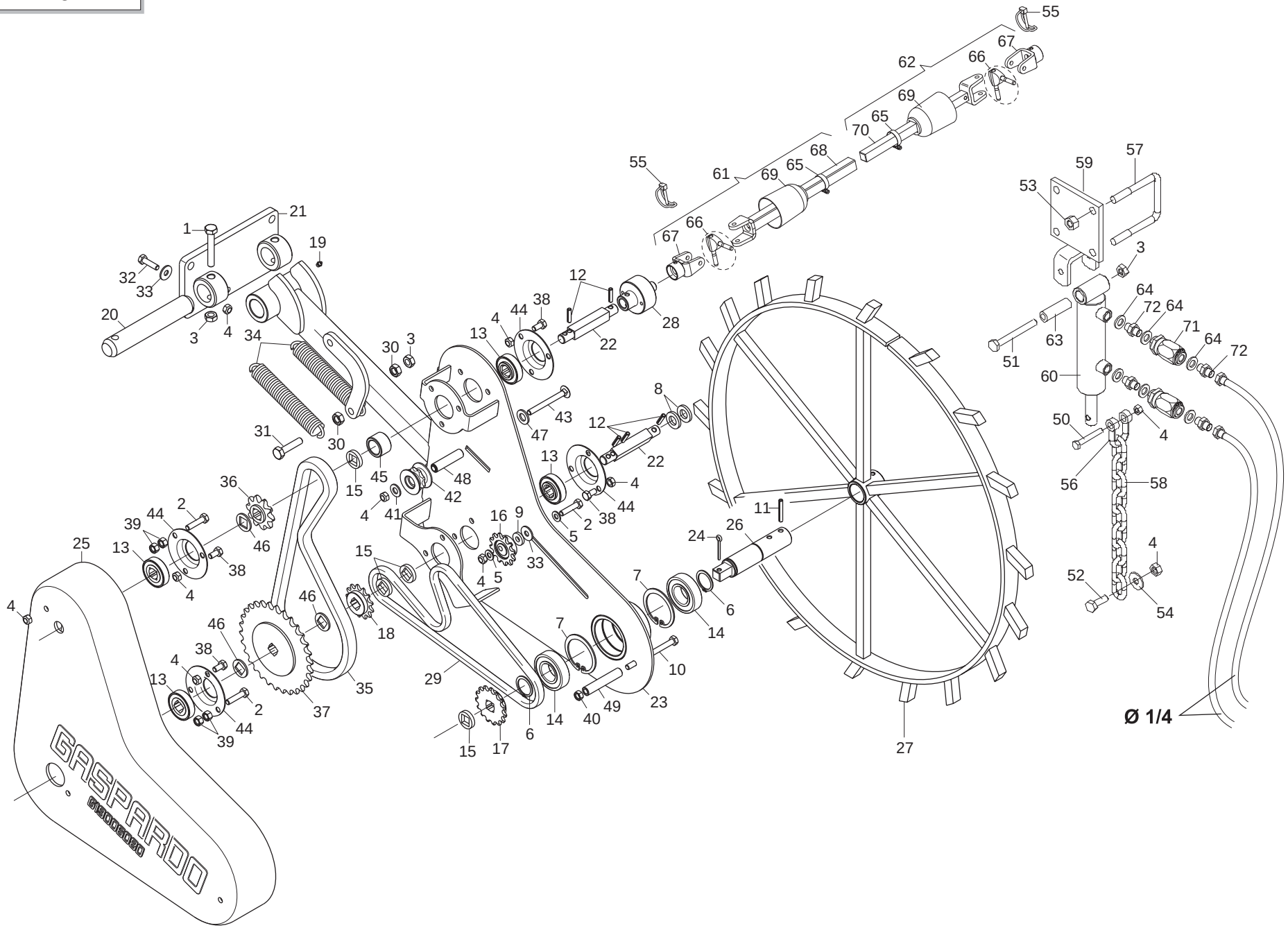

GASPARDO

cod. G19530831

RUOTA DI TRASMISSIONE

TAV. 041

Pos.	Cod.	Descrizione	Description	Description	Benennung	Descripcion
56	F02250667	GRILLO M10 U1947A ZN	CLEVIS- 3/8- GALVANISED- ART.	MANILLE DE 3/ 8 ZN ART. 9	U KETTENANSCHLUSS DA 3/ 8 ZN A	GRILLETE DA 3/ 8 ZN ART.9
57	F20110745	CAV.Q.M12X1,75X 35 83X 96 ZN	U-BOLT M12 X PIPE 70X70	CAVALIER M12 POUR TUBE 70X70	BsGELBOLZEN M12 FsR ROHR 70X70	PERNO EN U M12 X TUBO 70X70
58	G12210460	CATENA GENOVESE D.8 L.584 ZN				
59	G16031600	SUPPORTO CILINDRO				
60	G07002278	CILINDRO IDR.35X18X85	WATER CYLINDER 35X18X85	CYLINDRE HYDRAUL. 35X18X85	HYDRAULIKZYLINDER 35X18X85	CILINDRO HIDRæULICO 35X18X85
61	G17330200	CARDANO TRASM.LATO RUOTA COMPL				
62	G17330230	CARDANO LATO DISTRIB.COMPL.	COMPL. CARDAN ON DISTRIB. SIDE	CARDAN CÈT+ DISTRIBUTEUR COMPL	KARDANWELLE STREUERSEITE KOMPL	CARD-N LADO DISTRIB.COMPL.
63	G07000403	DISTANZIALE D.18X11X56 ZN	GALVANIZED SPACER D.18X11X56	ENTRETOISE D.18X11X56 ZN	DISTANZSTsCK D.18X11X56 ZN	DISTANCIADOR D.18X11X56 ZN
64	F03151238	RONDELLA RAME 13X19X1,5 -1/4"	1/4 COPPER WASHER	RONDELLE CUIVRE 1/4	UNTERLEGSCHEIBE KUPFER 1/4	ARANDELA COBRE 1/4
65	F02300017	FASCETTA STRING. 20/32 H.9	STRING FASTEN STRAPS 20/32 H.9	COLLIER DE SERRAGE 20/32 H.9	SCHELLE 20/32 H.9	ABRAZADERA 20/32 H.9
66	G22270454	CROCIERA COMPL. SP/S	SPIDER SP/S	CROSILLON COMPL CARDAN TRANSM	GELENKKREUZ KOMPL. SP/S	CRUCETA COMPL. SP/S
67	G19204060	FORCELLA				
68	G17330220	TUBO CARDANO Q.20 L.330	CARDAN TUBE Q.20 L.330	TUBE CARDAN Q.20 L.330	KARDANROHR Q.20 L.330	TUBO CARDAN Q.20 L.330
69	G66248094	COPRICARDANO SP	UNIVERSAL JOINT COVER SP	COUVRE-CARDAN SP	KARDANABDECKUNG SP	CUBRECARDæN SP
70	G17330190	TUBO CARDANO 16 L. 330				
71	F03151226	REGOL.DI FLUSSO VRF 1/4' GAS	1/4' GAS VALVE VRF	SOUPAPE REG DEBIT VRF 1/4" GAZ	VENITL VRF 1/4' GAS	VæLVULA VRF 1/4' GAS
72	F03150266	NIPPLO MM CIL-CIL 1/4-1/4 ZN	NIPPLE GALV.CYL.MALE 1/4 ZN	NIPPLE MALE CYL. 1/4 ZN	NIPPELZYL.1/4 ZN	NIPLE MACHO CIL.1/4 ZN

TAV. 061

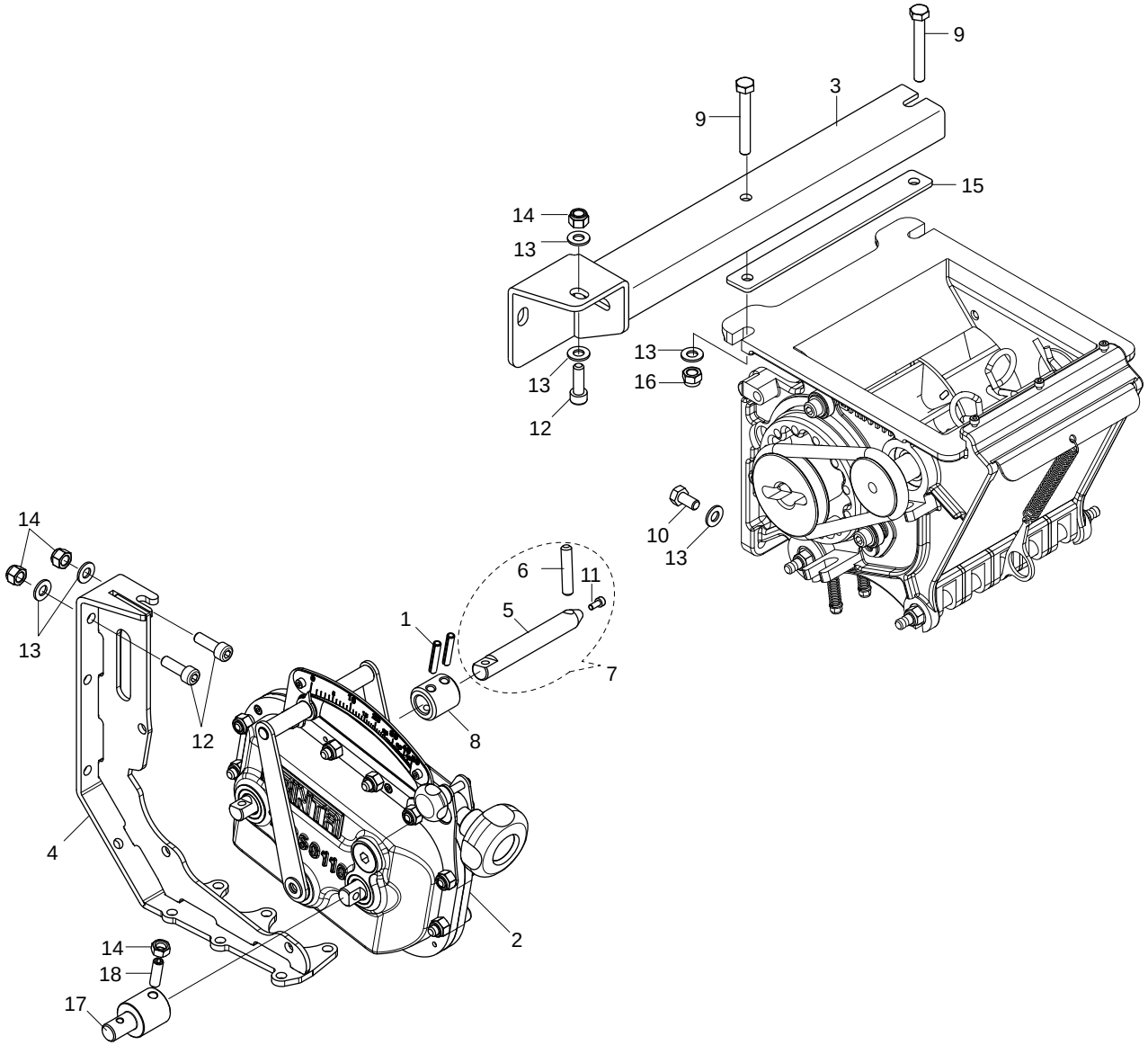

GASPARDO

SUPPORTI GRUPPO DISTRIBUZIONE

TAV. 061

Pos.	Cod.	Descrizione	Description	Description	Benennung	Descripcion
1	F02100114	SPINA E.P. 6X 30 U6873 C70 BR	ELASTIC PIN 6X30	GOUJON ELASTIQUE 6X30	SPANNHUELSE 6X30	ESPINA ELASTICA 6X30
2	G16060830	CAMBIO DESMO REG.SX COMPL	COMPL. GEARBOX DESMO LT REG.	BO+TE DE VITESSE R+G. GAUCHE C	GETRIEBE DESMO EINREG. LINKS K	CAMBIO DESMO REG. IZDA. COMPL.
3	G16060891	TRAVERSA SUPPORTO SX CAMBIO				
4	G16060840	SUPPORTO CAMBIO PONTE				
5	G16033810	ASSE TRASMISSIONE LUNGO	LONG DRIVE AXLE	AXE TRANSMISSION LONG	LANGE UBERTRAGUNGSACHSE	ARBOL TRANSMISION LARGO
6	G16033800	SPINA ACCOPPIAMENTO ALL.	PIN	GOUPILLE	STIFT	CLAVIJA
7	G16033790	ASSE TRASMISSIONE LUNGO COMPL.	COMPL. LONG DRIVE AXLE	AXE TRANSMISSION LONG COMPL.	LANGE _BERTRAGUNGSACHSE KOMPL.	-RBOL TRANSMISIËN LARGO COMPL.
8	G16033761	BOCCOLA 15,2X28X30				
9	F01020077	VITE M 8X1,25X60 U5737 8.8 ZN	BOLT M 8X60	VIS M 8X60	SCHRAUBE M 8X60	TORNILLO M 8X60
10	F01020434	VITE M 8X1,25X16 U5739 A2 IX	BOLT M 8X1,25X 16 U5739 8.8 IX	VIS M 8X1,25X 16 U5739 8.8 IX	SCHRAUBE M 8X1,25X 16 U5739 8.	TORNIL. M 8X1,25X 16 U5739 8.8
11	F01040026	VITE M 4X 0,7X10 U5931 A2 IX	SCREW 4X10 5931 INOX A2	VIS 4X10 5931 INOX A2	SCHRAUBE 4X10 5931 INOX A2	TORNILLO 4X10 5931 INOX A2
12	F01040094	VITE M 8X1,25X25 U5931 A2 IX	SCREW M 8X1,25X 25 U5931 IX A	VIS M 8X1,25X 25 U5931 IX A2	SCHRAUBE M 8X1,25X 25 U5931 IX	TORNIL. M 8X1,25X 25 U5931 IX
13	F01420047	ROS.M8 8,4X 24X 2 U6593 IX	WASHER M8 8,4X24X2 U6593 IX	RONDELLE M8 8,4X24X2 U6593 IX	SCHEIBE M8 8,4X24X2 U6593 IX	ARANDELA M8 8,4X24X2 U6593 IX
14	F01230032	DADO M 8X1,25 D982 A2 IX	NUT M 8X1,25 D982 A2 IX	ECROU M 8X1,25 D982 A2 IX	MUTTER M 8X1,25 D982 A2 I	TUERCA M 8X1,25 D982 A2 I
15	G17320420	LAMA DI SPESSORE				
16	F01230034	DADO M 8X1,25 D982 8	SELF LOCKING NUT M8X1,25	ECROU AUTOBL. M8X1,25	SELBSTSP.MUTT. M8X1,25	DADO AUTOBL. M8X1,25
17	G17330540	ASSE DI CONNESSIONE TRASMISS.				
18	F01050101	VIT.M 8X1,25X 25 U5927 ZN	GRUB-SCREW 8 X25 5927	GOUJON 8 X25 5927	STIFT 8 X25 UNI 5927	TORNILLO SIN CABEZA 8 X25 5927

TAV. 070

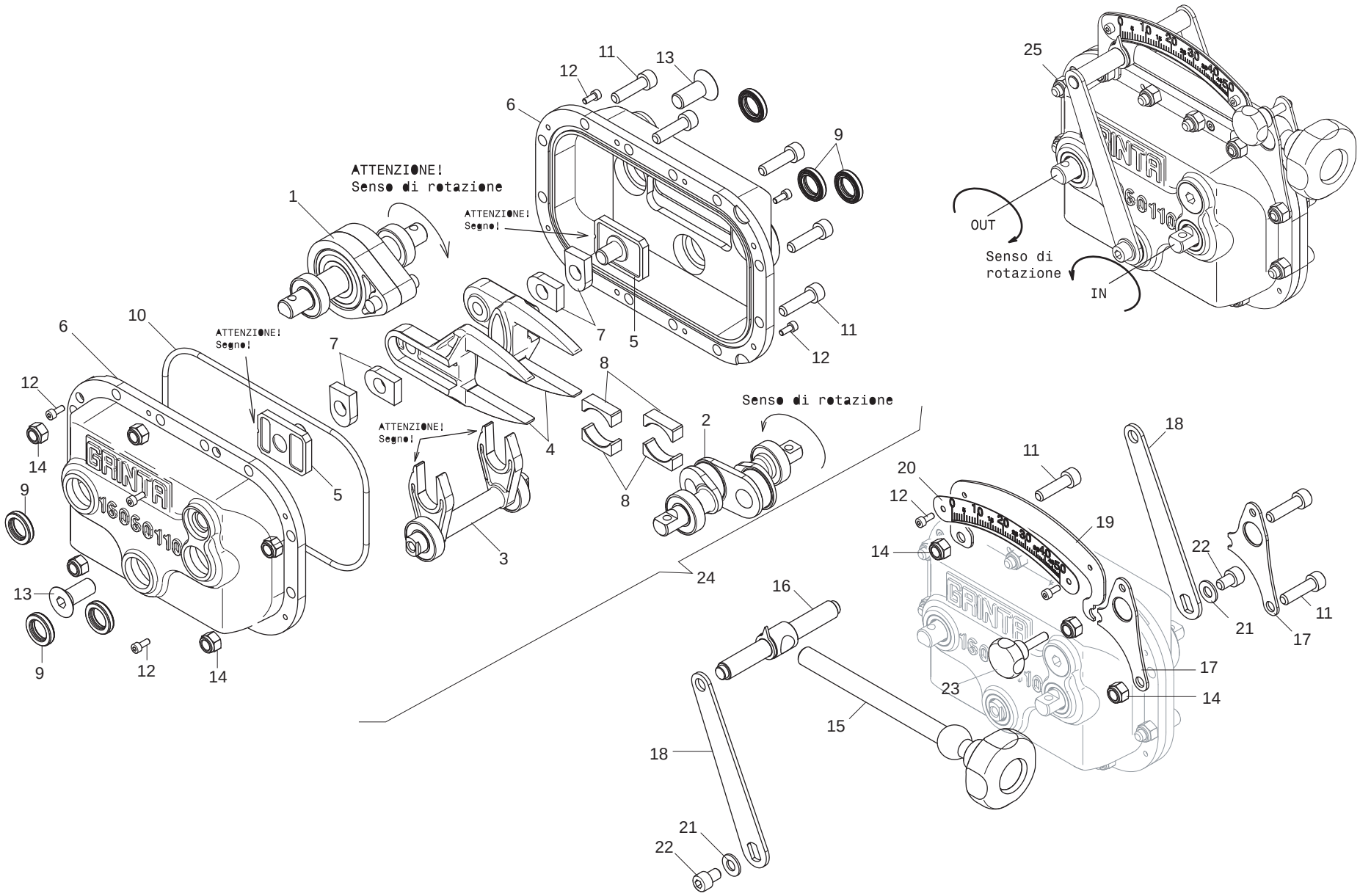
ATTENZIONE!
Senso di rotazione
ATTENZIONE!
Segno!
ATTENZIONE!
Segno!
ATTENZIONE!
Segno!
Senso di rotazione
OUT
Senso di
rotazione
IN
BRINTI
160 60 110
BRINTI
60 110
BRINTI
160 60 110

CAMBIO "DESMO"

TAV. 070

Pos.	Cod.	Descrizione	Description	Description	Benennung	Descripcion
1	G16060600	ALBERO USCITA	SHAFT	ARBRE	WELLE	EJE
2	G16060650	ALBERO CAMMES	CAM SHAFT	ARBRE A CAMES	NOCKENWELLE	EJE DE LEVAS
3	G16060660	FORCHETTA CAMBIO DESMO	FORK	FOURCHETTE	GABEL	HORQUILLA
4	G16060500	BIELLA	CONNECTING ROD	BIELLE	PLEUEL	BIELA
5	G16060520	GUIDA	GUIDE	GUIDE	FUHRUNG	GUA
6	G16060110	SCATOLA CAMBIO DESMO	GEARBOX DESMO	BOITE DE VITESSE DESMO	GETRIEBEKASTEN DESMO	CAJA DE CAMBIO VELOCIDAD DESMO
7	G16060630	BRONZINA REGOLAZIONE CAMBIO	BRONZE BUSHING	BOITE BRONZE	BRONZEBUCHSE	CASQUILLO BRONCE
8	G16060640	BRONZINA ALBERO CAM CAMBIO	BRONZE BUSHING	BOITE BRONZE	BRONZEBUCHSE	CASQUILLO BRONCE
9	F03011124	ANELLO TENUTA 15X25X5 NBR	SEALING RING 15X25X5 NBR	BAGUE D'ETANCHEITE 15X25X5 NBR	DICHTUNGSRING 15X25X5 NBR	ANILLO AISLADOR 15X25X5 NBR
10	F03011146	GUARNIZIONE OR D.4X182 NBR	O-RING GASKET D.4X182 NBR	JOINT TORIQUE D.4X182 NBR	DICHTUNG OR D.4X182 NBR	JUNTA OR D.4X182 NBR
11	F01040107	VITE M 8X1,25X30 U5931 A2 IX	SCREW M8X1,25X 30 U5931 A2 IX	VIS M8X1,25X 30 U5931 A2 IX	SCHRAUBE M8X1,25X 30 U5931 A2	TORNIL. M8X1,25X 30 U5931 A2
12	F01040026	VITE M 4X 0,7X10 U5931 A2 IX	SCREW 4X10 5931 INOX A2	VIS 4X10 5931 INOX A2	SCHRAUBE 4X10 5931 INOX A2	TORNILLO 4X10 5931 INOX A2
13	F01030105	VITE M12X1,75X30 U5933 A2 IX	SCREW M12X1,75X 30 U5933 A2 I	VIS M12X1,75X 30 U5933 A2 IX	SCHRAUBE M12X1,75X 30 U5933 A2	TORNIL. M12X1,75X 30 U5933 A2
14	F01230032	DADO M 8X1,25 D982 A2 IX	NUT M 8X1,25 D982 A2 IX	ECROU M 8X1,25 D982 A2 IX	MUTTER M 8X1,25 D982 A2 I	TUERCA M 8X1,25 D982 A2 I
15	G16060750	VITE REGOLAZIONE	ADJUSTMENT SCREW	VIS DE REGLAGE	EINSTELLSCHRAUBE	TORNILLO DE REGULACION
16	G16060720	PONTE REGOLAZIONE	JOINT	RACCORD	VERBINDUNG	UNIN
17	G16060780	SUPPORTO REGOLAZIONE	REGULATION SUPPORT	SUPPORT REGLAGE	EINSTELLERHALTERUNG	SOPORTE REGULACION
18	G16060800	LEVA REGOLAZIONE	ADJUSTMENT LEVER	LEVIER REGLAGE	EINSTELLHEBEL	PALANCA REGULACION
19	G16060790	SUPPORTO SCALA DESMO	SUPPORT	SUPPORT	HALTERUNG	SOPORTE
20	G16060810	SCALA CAMBIO DESMO	GRADUATED SCALE	ECHELLE GRADUEE	GRADSKALA	ESCALA GRADUADA
21	F01410050	ROS.M8 8,4X 17X1,6 U6592 IX	WASHER 8,4X 17X1,6 U6592 IX	RONDELLE 8,4X 17X1,6 U6592 IX	SCHEIBE 8,4X 17X1,6 U6592 IX	ARANDELA 8,4X 17X1,6 U6592 IX
22	F01040085	VITE M 8X1,25X12 U5931 A2 IX	SCREW M8X1,25X 12 U5931 IX A2	VIS M8X1,25X 12 U5931 IX A2	SCHRAUBE M8X1,25X 12 U5931 IX	TORNIL. M8X1,25X 12 U5931 IX A
23	G16060710	VOLANTINO M6X25	HANDWHEEL	VOLANT	HANDRAD	VOLANTE
24	G16060200	CAMBIO DESMO COMPL.	COMPL. DESMO GEARBOX	BO+TE DE VITESSE DESMO COMPL.	GETRIEBE DESMO KOMPL.	CAMBIO DESMO COMPL.
25	G16060830	CAMBIO DESMO REG.SX COMPL	COMPL. GEARBOX DESMO LT REG.	BO+TE DE VITESSE R+G. GAUCHE C	GETRIEBE DESMO EINREG. LINKS K	CAMBIO DESMO REG. IZDA. COMPL.

TAV. 081

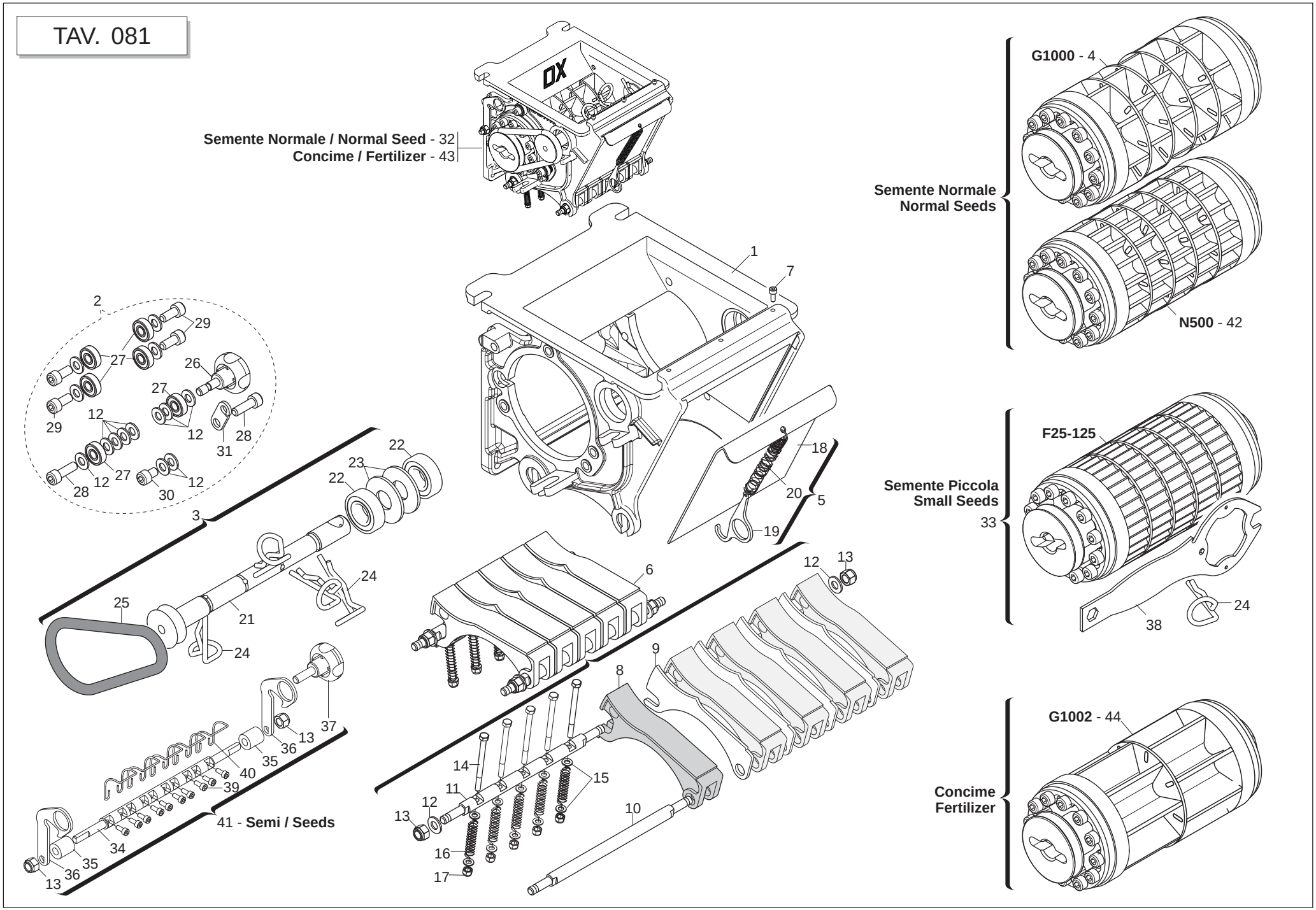

GASPARDO

DOSATORE "GRINTA"

TAV. 081

Pos.	Cod.	Descrizione	Description	Description	Benennung	Descripcion
1	G16060010	SCATOLA DOSATORE	DISTRIBUTION BOX	BOITE DE DISTRIBUTION	STREUUNGSKASTEN	CAJA DE DISTRIBUCION
2	G16060260	PART.FISSAGGIO RUOTA COMPL.	COMPL. WHEEL FIXING PART	PI+CE FIXATION ROUE COMPL.	RADBEFESTIGUNG KOMPL.	PART. FIJACIËN RUEDA COMPL.
3	G16060020	AGITATORE COMPL.	COMPL. AGITATOR	AGITATEUR COMPL.	R_HRWELLE KOMPL.	AGITADOR COMPL.
4	G16060330	RUOTA DOSATORE G 1000 COMPL	COMPL. DOSING WHEEL G 1000	ROUE DOSEUR G 1000 COMPL	DOSIERRAD G 1000 KOMPL	RUEDA DOSIFICADOR G 1000 COMPL
5	G16060050	SPORTELLO GRANDE COMPL.	COMPL. LARGE HATCH	PORTILLON GRAND COMPL.	GROSSE KLAPPE KOMPL.	PORTILLO GRANDE COMPL.
6	G16060030	TASTATORE COMPL.	COMPL. FEELER PIN	T-TEUR COMPL.	ABTASTER KOMPL.	PALPADOR COMPL.
7	F01040026	VITE M 4X 0,7X10 U5931 A2 IX	SCREW 4X10 5931 INOX A2	VIS 4X10 5931 INOX A2	SCHRAUBE 4X10 5931 INOX A2	TORNILLO 4X10 5931 INOX A2
8	G19004660	TASTATORE	FEELER PIN	TATEUR	ABTASTER	PALPADOR
9	G16060120	SPESSORE TASTATORE INOX	SHIMS	CALE	ZWISCHENLEGSCHEIBE	ESPACIADOR
10	G16060130	ALBERO TASTATORE INOX	FEELER PIN	TATEUR	ABTASTER	PALPADOR
11	G16060140	ALBERO BLOCCAGGIO TASTATORE A2	SHAFT	ARBRE	WELLE	EJE
12	F01410050	ROS.M8 8,4X 17X1,6 U6592 IX	WASHER 8,4X 17X1,6 U6592 IX	RONDELLE 8,4X 17X1,6 U6592 IX	SCHEIBE 8,4X 17X1,6 U6592 IX	ARANDELA 8,4X 17X1,6 U6592 IX
13	F01230032	DADO M 8X1,25 D982 A2 IX	NUT M 8X1,25 D982 A2 IX	ECROU M 8X1,25 D982 A2 IX	MUTTER M 8X1,25 D982 A2 I	TUERCA M 8X1,25 D982 A2 I
14	F01020385	VITE M 5X0,8X 60 U5739 A2 IX	SCREW M5X 0,8X 60 U5739 8.8 IX	VIS M5X 0,8X 60 U5739 8.8 IX	SCHRAUBE M5X 0,8X 60 U5739 8.8	TORNIL. M5X 0,8X 60 U5739 8.8
15	F01410022	ROS.M5 5,3X 10X 1 U6592 IX	WASHER 5,3X 10X 1 U6592 IX	RONDELLE 5,3X 10X 1 U6592 IX	SCHEIBE 5,3X 10X 1 U6592 IX	ARANDELA 5,3X 10X 1 U6592 IX
16	G18904150	MOLLA TASTATORE	FEELER PIN SPRING	RESSORT TATEUR	ABTASTERFEDER	MUELLE DE PALPADOR
17	F01230020	DADO M 5X 0,8 D982 A2 IX	NORM.SELF-LOCKING NUT 5	ECROU AUTOB.NOR.5	SELBSTSP. MUTTER NOR. 5	TUERCA AUTOB. NOR. 5
18	G16060160	SPORTELLO GRANDE INOX	LARGE HATCH	PORTILLON GRAND	GROSSE KLAPPE	PORTILLO GRANDE
19	G16060170	GANCIO INOX	HOOK	CROCHET	HAKEN	GANCHO
20	G18904170	MOLLA SPORTELLO GRANDE	LARGE HATCH SPRING	RESSORT PORTILLON GRAND	GROSSE KLAPPE FEDER	MUELLE DE PORTILLO GRANDE
21	G16060090	ALBERO AGITATORE INOX	SHAFT	ARBRE	WELLE	EJE
22	F04010132	CUSC.d20 D42 B12 6004 2RSIX	BEARING d20 D42 B12 6004 2R	PALIER d20 D42 B12 6004 2RS	LAGER d20 D42 B12 6004 2RSI	COJINETE d20 D42 B12 6004 2
23	G18701920	RONDELLA 20X48X2,5	WASHER 20X48X2,5	RONDELLE 20X48X2,5	UNTERLEGSCHEIBE 20X48X2,5	ARANDELA 20X48X2,5
24	G16060100	COPIGLIA R 4,5 PIEGATA INOX	SPLIT PIN R 4,5 INOX	GOUPILLE R 4,5 INOX	SPLINT R 4,5 INOX	CHAVETA R 4,5 INOX
25	F03011142	GUARNIZIONE OR 10 X 100 EPDM	O-RING GASKET 10X100	JOINT TORIQUE 10X100	DICHTUNG OR 10X100	JUNTA TËRICA OR 10X100
26	G16060250	VOLANTINO FISSAGGIO RUOTA	HANDWHEEL	VOLANT	HANDRAD	VOLANTE
27	F04010113	CUSC.d8 D22 B7 608 2RS IX	BEARING d8 D22 B7 608 2RS	PALIER d8 D22 B7 608 2RS	LAGER d8 D22 B7 608 2RS I	COJINETE d8 D22 B7 608 2R
28	F01040094	VITE M 8X1,25X25 U5931 A2 IX	SCREW M 8X1,25X 25 U5931 IX A	VIS M 8X1,25X 25 U5931 IX A2	SCHRAUBE M 8X1,25X 25 U5931 IX	TORNIL. M 8X1,25X 25 U5931 IX
29	F01040090	VITE M 8X1,25X18 U5931 A2 IX	SCREW M8X1,25X 18 U5931 IX A2	VIS M8X1,25X 18 U5931 IX A2	SCHRAUBE M8X1,25X 18 U5931 IX	TORNIL. M8X1,25X 18 U5931 IX
30	F01040085	VITE M 8X1,25X12 U5931 A2 IX	SCREW M8X1,25X 12 U5931 IX A2	VIS M8X1,25X 12 U5931 IX A2	SCHRAUBE M8X1,25X 12 U5931 IX	TORNIL. M8X1,25X 12 U5931 IX A
31	G16060190	LEVA BLOCCAGGIO INOX	LOCKING LEVER	LEVIER DE BLOCAGE	SPERRHEBEL	PALANCA DE BLOQUEO
32	G16060081	MONT.DOSATORE SEME				
33	G16060411	RUOTA DOSATORE F25-125				
34	G16060220	ALBERO PULITORE INOX	ANTI CLOGGING SHAFT	ARBRE ANTI-ENGORGEMENT	WELLE VERSTOPFUNGSHEMMENDES	EJE ANTI OBSTRUCCION
35	G18802500	BUSSOLA BRONZO 17X8X19	BOLT 17X8X19	BOULON 17X8X19	SCHRAUBE 17X8X19	PERNO 17X8X19
36	G16060210	LEVA ALBERO PULITORE	LEVER	LEVIER	HEBEL	PALANCA
37	F06220019	VOLANTINO 4LOBI D.40-M 8X25	4-LOBE HANDWHEEL M8X25	VOLANT 4 LOBES M8X25	HANDRAD 4 BUCKEL M8X25	VOLANTE 4 LOBI M8X25
38	G16060670	CHIAVE DOSATORE	SPANNER	CLE	SCHLUSSEL	LLAVE
39	F01040026	VITE M 4X 0,7X10 U5931 A2 IX	SCREW 4X10 5931 INOX A2	VIS 4X10 5931 INOX A2	SCHRAUBE 4X10 5931 INOX A2	TORNILLO 4X10 5931 INOX A2
40	G18904160	MOLLA PULITORE	ANTI CLOGGING SPRING	RESSORT ANTI-ENGORGEMENT	VERSTOPFUNGSHEMMENDES FEDER	MUELLE DE ANTI OBSTRUCCION
41	G16060040	PULITORE COMPL	ANTI CLOGGING	ANTI-ENGORGEMENT	VERSTOPFUNGSHEMMENDES EL.	ANTI OBSTRUCCIN
42	G16060380	RUOTA DOSATORE N 500 COMPL	COMPL. DOSING WHEEL N 500	ROUE DOSEUR N 500 COMPL	DOSIERRAD N 500 KOMPL	RUEDA DOSIFICADOR N 500 COMPL.
43	G17320570	DOSATORE PP CONCIME COMPL.				
44	G16060300	RUOTA DOSATORE G 1002 COMPL				

TAV. 270

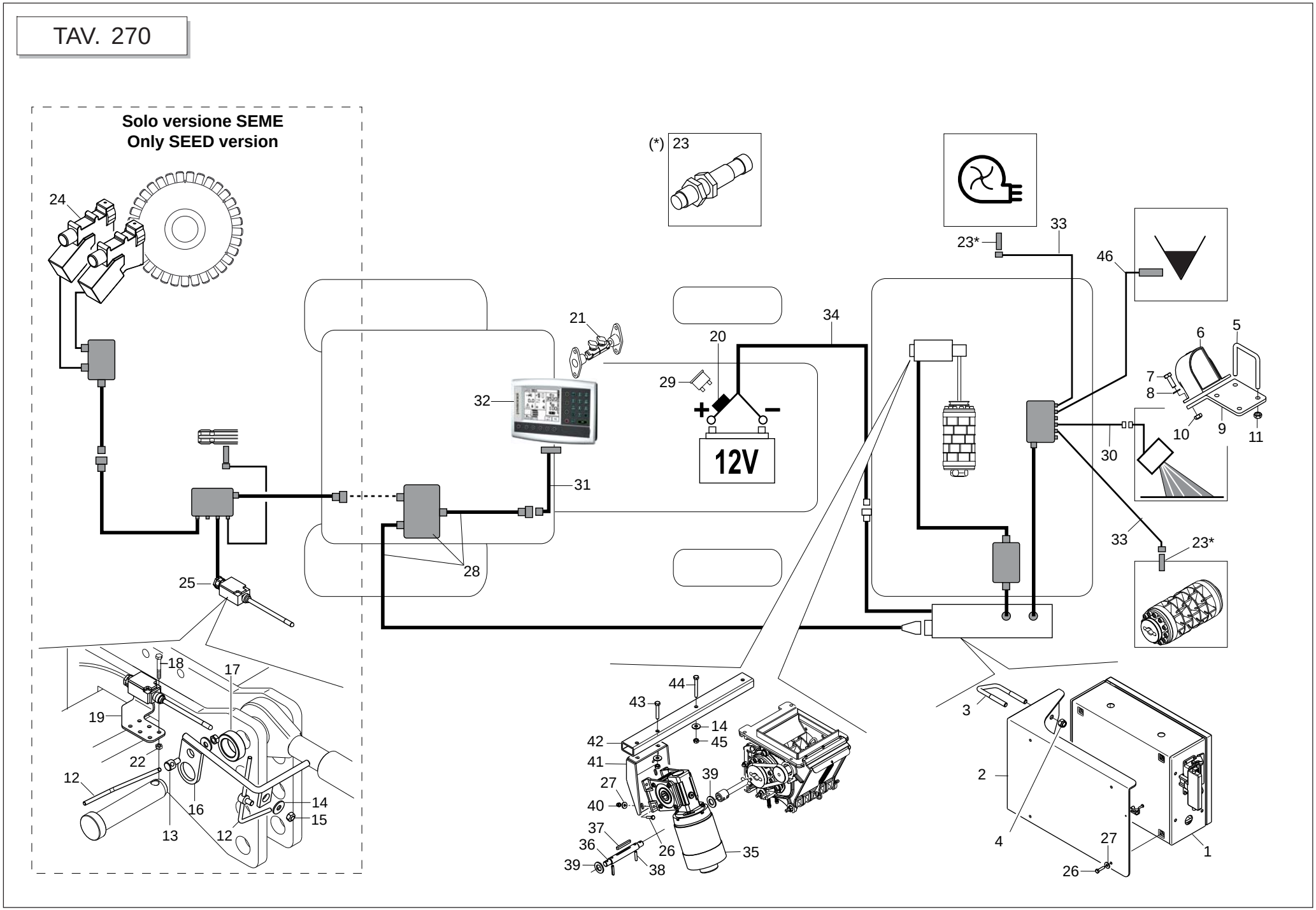

GASPARDO

GESTIONE ELETTRICA DELLA DISTRIBUZIONE

TAV. 270

Pos.	Cod.	Descrizione	Description	Description	Benennung	Descripcion
1	G19900010	MONT.QUADRO TRASM.ELETT.GENIUS				
2	G17330670	SUPPORTO QUADRO COMANDO GENIUS				
3	F20110745	CAV.Q.M12X1,75X 35 83X 96 ZN	U-BOLT M12 X PIPE 70X70	CAVALIER M12 POUR TUBE 70X70	BsGELBOLZEN M12 FsR ROHR 70X70	PERNO EN U M12 X TUBO 70X70
4	F01230059	DADO M12X1,75 D982 8 ZN	NUT M12X1,75 D982 8 ZB	ECRO.M12X1,75 D982 8 ZB	MUTT.M12X1,75 D982 8 ZB	TUER.M12X1,75 D982 8 ZB
5	F20110745	CAV.Q.M12X1,75X 35 83X 96 ZN	U-BOLT M12 X PIPE 70X70	CAVALIER M12 POUR TUBE 70X70	BsGELBOLZEN M12 FsR ROHR 70X70	PERNO EN U M12 X TUBO 70X70
6	F05010487	RADAR RDS TGSS (MK III)				
7	F01020476	VITE M10X 1,5X30 U5739 8.8 ZN	BOLT M 10X30	VIS M 10X30	SCHRAUBE M 10X30	TORNILLO M 10X30
8	F01410064	ROS.M10 10,5X 20X 2 U6592 ZN	WASHER 10,5X21	RONDELLE 10,5X21	SCHEIBE 10,5X21	ARANDELA 10,5X21
9	G17321350	STAFFA SUPPORTO RADAR				
10	F01220033	DADO M10X 1,5 D980 8 ZN	NUT M10X 1,5 D980 8 ZB	ECRO.M10X 1,5 D980 8 ZB	MUTT.M10X 1,5 D980 8 ZB	TUER.M10X 1,5 D980 8 ZB
11	F01220048	DADO M12X1,75 D980 8 ZN	SELF LOCKING NUT M12X1,75 980V	ECROU AUTOBL. M12X1,75 980-V	SIEHE 00553312	DADO AUTOBL. M12X1,75 980-V
12	G07002444	FERMO ZN	GALVANIZED STOP	ARRET ZN	FESTSTELLVORRICHTUNG ZN	BLOQUEO ZN
13	G22230190	MORSETTO COPRISEME ZINC.	GALVAN. SEED COVER CLAMP	BORNE COUVRE-GRAINES ZING.	KLEMME SAMENABDECKER VERZINKT	SUJETADOR CUBRESEMILLAS ZINC.
14	F01420048	ROS.M8 8,4X 24X 2 U6593 ZN	PLANE WASHER D.8	RONDELLE D.8	SCHEIBE D.8	ARANDELA D.8
15	F01200244	DADO M 8X1,25 U5588 6.8 ZN	NUT M8	ECROU M8	MUTTER M8	DADO M8
16	G17917080	ATTIVAZIONE FINGHER ZN				
17	G18803060	BOCCOLA 32,5 X48,3 X16 ZN				
18	F01020024	VITE M 5X0,8X 40 U5737 8.8 ZN	BOLT 5X40 5737 8.G GALVANIZED	VIS 5X40 5737 8.G ZN	SCHRAUBE 5X40 5737 8.G ZN	TORNILLO 5X40 5737 8.G ZN
19	G17330290	LAMA SUPPORTO FINGER ZN				
20	F05010021	PORTAFUSIBILE MAXI STAGNO				
21	F05010512	STAFFA PER MONITOR GENIUS				
22	F01220200	DADO M 5X 0,8 D980 8 ZN	NUT TRISTOP M 5	ECROU TRISTOP M 5	MUTTER TRISTOP M 5	TUERCA TRISTOP M 5
23	F05010396	SENSORE IND.NBN4-12GM50-EO-V1				
24	F05010486	DISP.ELETTR.ESCL.FILE WUK-97S				
25	G19900150	FINGER CON CAVO L.0,6MT				
26	F01020406	VITE M 6X 1X 25 U5739 8.8 ZN	BOLT M 6X25	VIS M 6X25	SCHRAUBE M 6X25	TORNILLO M 6X25
27	F01420036	ROS.M6 6,4X 18X 2 U6593 ZN	FLAT WASHER 6-6X 18X2 6593 ZN	ROND. PLATE 6-6X 18X2 6593 ZN	SCHEIBE 6-6X 18X2 6593 ZN	ARAND. PLANA 6-6X 18X2 6593 ZN
28	G19900090	COLL.QUADRO-MONITOR GENIUS				
29	F05010022	FUSIBILE AUTO MAXI 30A VERDE				
30	G19900050	CAVO COLLEGAM.RADAR RDS 2,0MT				
31	F05010511	CAVO PER MONITOR GENIUS				
32	F05010510	MONITOR GENIUS				
33	F05010494	PROLUNGA SENS.INDUTT.CONN.90°				
34	G19900100	CAVO BATT.TRASM.ELETT.GENIUS				
35	F05010491	MOTORIDUTTORE 12V-450W 30:1				
36	G17330660	ASSE MOTORE				
37	F02150040	LINGUETTA 6X 6X 55 U6604A	TAB 06X6X55 UNI 6604/A	LANGUETTE 06X6X55 UNI 6604/A	FEDERKEIL 06X6X55 UNI 6604/A	LENGsETA 06X6X55 UNI 6604/A
38	F02100114	SPINA E.P. 6X 30 U6873 C70 BR	ELASTIC PIN 6X30	GOUJON ELASTIQUE 6X30	SPANNHUELSE 6X30	ESPINA ELASTICA 6X30
39	F01410112	ROS.M18 19X 34X 3 U6592 ZN	PLANE WASHER D.18	RONDELLE D.18	SCHEIBE D.18	ARANDELA D.18
40	F01220011	DADO M 6X 1 D980 8 ZN	SELF LOCKING NUT M6	ECROU AUTOBL. M6	SELBSTSPERR.MUTTER M6	DADO AUTOBL. M6
41	G17321550	STAFFA SUPPORTO MOTORE				
42	G17330680	TUBO R. 50X 30X 4X 490 4F.D.10				
43	F01020452	VITE M 8X1,25X50 U5739 8.8 ZN	BOLT M 8X50	VIS M 8X50	SCHRAUBE M 8X50	TORNILLO M 8X50
44	F01020082	VITE M 8X1,25X65 U5737 8.8 ZN	BOLT M 8X65	VIS M 8X65	SCHRAUBE M 8X65	TORNILLO M 8X65
45	F01220022	DADO M 8X1,25 D980 8 ZN	SELF LOCKING NUT M8X1,25 980V	ECROU AUTOBL. M8X1,25 980-V	SELBSTSP.MUTT. M8X1,25 980-V	DADO AUTOBL. M8X1,25 980-V
46	F05010386	SENSORE CAPACITIVO CJ8-18GM-E	CAPACITIVE SENSOR CJ8-18GM-E			

TAV. 091

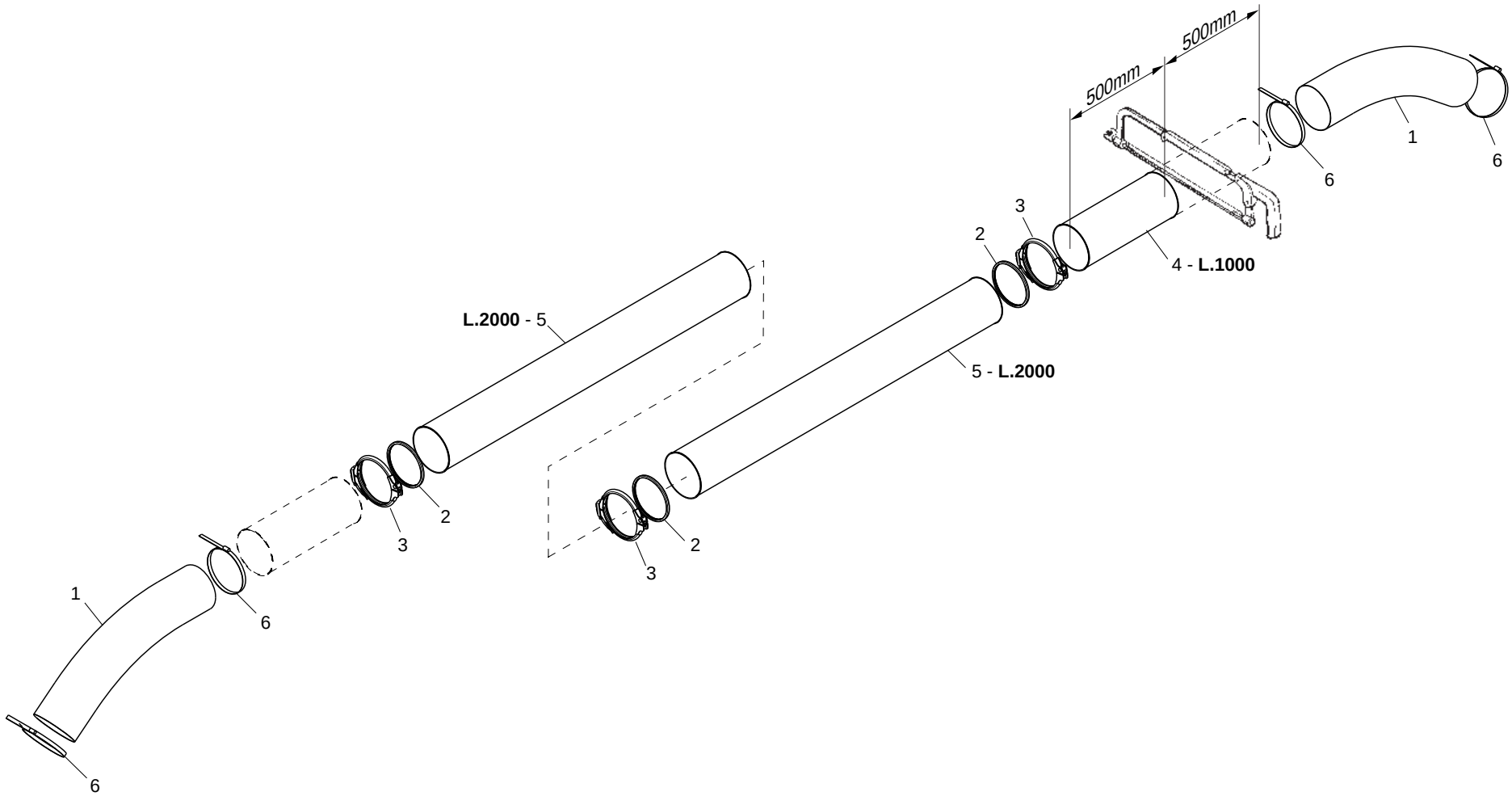

GASPARDO

cod. G19530831

TUBI DI RACCORDO

TAV. 091

Pos.	Cod.	Descrizione	Description	Description	Benennung	Descripcion
1	F03100430	TUBO EOLO 152 PU				
2	F03100404	GUARNIZIONE TENUTA D.150 SILIC				
3	F03100402	ANELLO QUICK CONNECT D.150 ZN				
4	F03100401	TUBO D.150X1 X1000 VERN.				
5	F03100400	TUBO D.150X1 X2000 VERN.				
6	F02300026	FASCETTA STRING.150/170 H.12	150/170 H.12 CLAMP	COLLIER DE SERRAGE 150/170 H.1	KABELSCHELLE 150/170 H.12	ABRAZADERA 150/170 H.12

TAV. 101

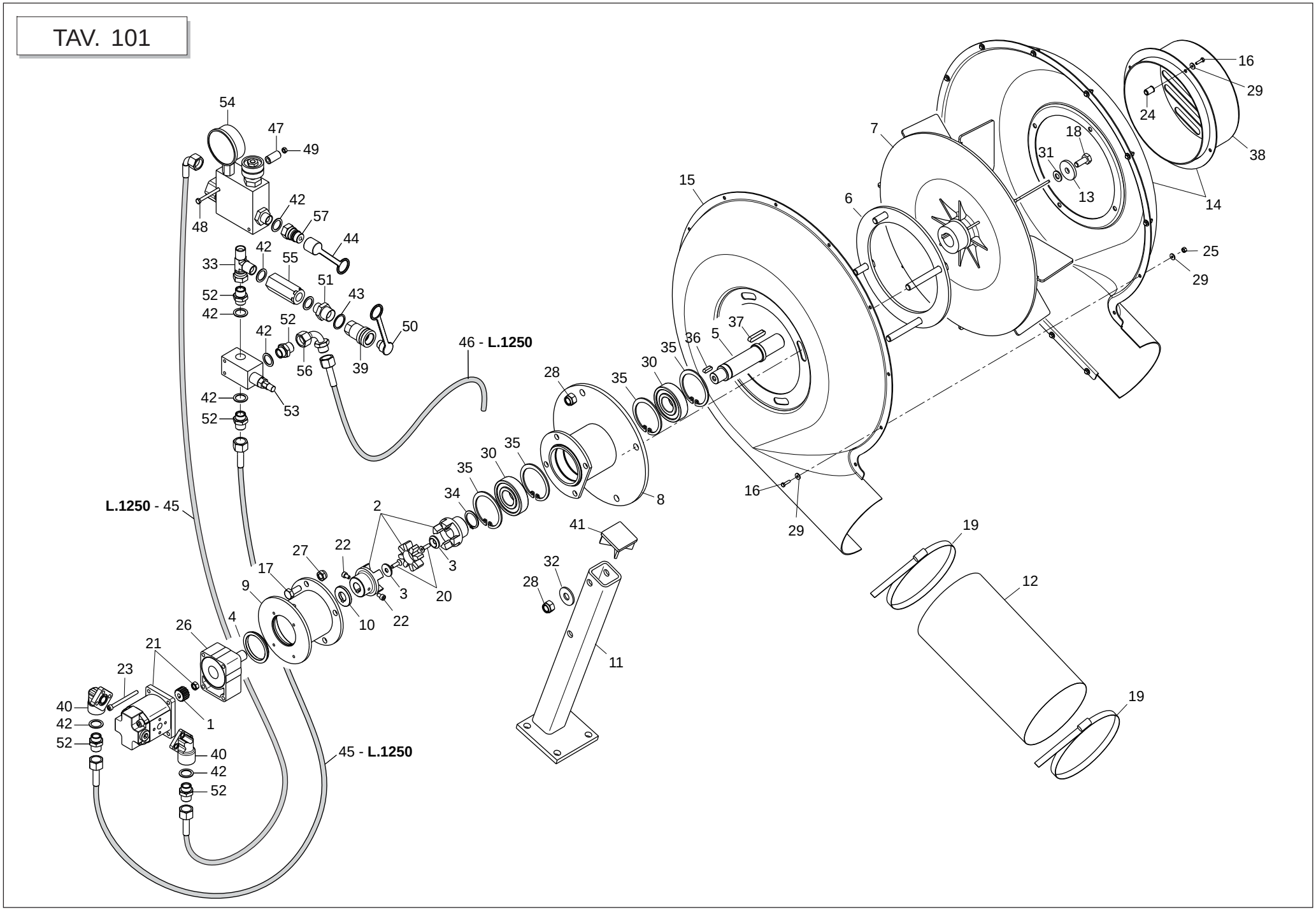

GASPARDO

SOFFIANTE CON AZIONAMENTO OLEODINAMICO DIPENDENTE DA TRATTORE

TAV. 101

Pos.	Cod.	Descrizione	Description	Description	Benennung	Descripcion
1	F03151250	SEMIGIUNTO DENTATO Z-14 MOTORE	SEMI-COUPLING Z-14 ENGINE SIDE	SEMIJOINT Z-14 COTE MOTEUR	HALBKUPPLUNG Z-14 MOTORSEITE	SEMIJUNTA Z-14 LADO MOTOR
2	G15355490	GIUNTO ELASTICO D.18-22	LOCK COUPLING D.18-22	JOINT DE BLOCAGE D.18-22	SPERRKUPPLUNG D.18-22	JUNTA DE BLOQUEO D.18-22
3	G15355500	RONDELLA AUTOCENTRANTE ZN	SELF-CENTERING WASHER ZN	RONDELLE AUTOCENTREE ZN	SELBSTZENTR.UNTERLEGSCH. ZN	ARANDELA AUTOCENTRADORA ZN
4	G15355510	ANELLO	RING	BAGUE	RING	ANILLO
5	G16150020	ALBERO TRASMISSIONE	TRANSMISSION SHAFT	ARBRE DE TRANSMISSION	ANTRIEBSWELLE	ARBOL DE TRANSMISION
6	G16150050	FLANGIA INTERNA	INTERNAL FLANGE	BRIDE INTERNE	INNENFLANSCH	BRIDA INTERIOR
7	G16150142	VENTOLA SOFFIANTE GIGANTE				
8	G16150170	MOZZO PORTA CUSCINETTI				
9	G16150210	MOZZO PORTA MOTORE				
10	G16150220	DISTANZIALE ZN				
11	G17350020	SUPPORTO VENTOLA				
12	G17350180	MANICOTTO UNIONE PA1				
13	G20970005	RONDELLA 38,5X5X11	WASHER 38-5X5X11	RONDELLE 38-5X5X11	UNTERLEGSCHEIBE 38-5X5X11	ARANDELA 38-5X5X11
14	G16150650	CONCHIGLIA ESTERNA DX	RIGHT EXTERN PROTECTION			
15	G16150640	CONCHIGLIA DI FISSAGGIO DX	RIGHT PROTECTION FOR FIX.			
16	F01020403	VITE M 6X 1X 16 U5739 8.8 ZN	BOLT M 6X16	VIS M 6X16	SCHRAUBE M 6X16	TORNILLO M 6X16
17	F01020472	VITE M10X 1,5X25 U5739 8.8 ZN	BOLT 10X25 5739 8.G GALVANIZED	VIS 10X25 5739 8.G ZN	SCHRAUBE 10X25 5739 8.G ZN	TORNILLO 10X25 5739 8.G ZN
18	F01020476	VITE M10X 1,5X30 U5739 8.8 ZN	BOLT M 10X30	VIS M 10X30	SCHRAUBE M 10X30	TORNILLO M 10X30
19	F02300026	FASCETTA STRING.150/170 H.12	150/170 H.12 CLAMP	COLLIER DE SERRAGE 150/170 H.1	KABELSCHELLE 150/170 H.12	ABRAZADERA 150/170 H.12
20	F01030036	VITE M 6X 1X16 U5933 10.9 ZD				
21	F03151264	MOTORE INGR.DX 5,9 COMPL				
22	F01040058	VITE M 6X 1X10 U5931 8.8 ZN	BOLT 6 X10 5931 8.G GALVANIZ	VIS 6 X10 5931 8.G ZN	SCHRAUBE 6 X10 5931 8.G ZN	TORNILLO 6 X10 5931 8.G ZN
23	F01040070	VITE M 6X 1X70 U5931 8.8 ZN	BOLT M 6 X1 X 70	VIS M6X1 X 70	SCHRAUBE M6 X 1 X 70	TORNILLO M6 X1 X 70
24	F02250681	INSERTO FIL.M 6X14 ZN T.TONDA	THREADED INSERT M6X14 ZN	INSERT FILET+ M6X14 ZN	GEWINDEBUCHSE M6X14 ZN	INSERTO FILETT.M6X14 ZN
25	F01230022	DADO M 6X 1 D982 8 ZN	NORM.SELF-LOCKING NUT 6 GALVAN	ECROU AUTOB.NOR.6 ZN	SELBSTSP. MUTTER NOR.6 ZN	TUERCA AUTOB. NOR. 6 ZN
26	F06140023	TENDICINGHIA	BELT TIGHTENER	TENDEUR DE COURROIE	RIEMENSPANNER	TENSOR DE CORREA
27	F01230048	DADO M10X 1,5 D982 8 ZN	NORM.SELF-LOCKING NUT 10 GALVA	ECROU AUTOB.NOR.10 ZN	SELBSTSP. MUTTER NOR. 10 ZN	TUERCA AUTOB. NOR. 10 ZN
28	F01230058	DADO M12X1,25 D982 8 ZN	SELF LOCKING NUT M12X1,25	ECROU AUTOBL. M12X1,25	SELBSTSPERR.MUTTER M12X1,25	DADO AUTOBL. M12X1,25
29	F01410037	ROS.M6 6,4X12,5X1,6 U6592 ZN	PLANE WASHER D.6	RONDELLE D.6	SCHEIBE D.6	ARANDELA D.6
30	F04010215	CUSC.D30 D72 B19 6306 2RSC3 EX	BEARING 6306 2RS C3	PALIER 6306 2RS C3	LAGER 6306 2RS C3	COJINETE 6306 2RS C3
31	F01410064	ROS.M10 10,5X 20X 2 U6592 ZN	WASHER 10,5X21	RONDELLE 10,5X21	SCHEIBE 10,5X21	ARANDELA 10,5X21
32	F01420084	ROS.M14 14,5X 36X 3 U6593 ZN	GALVANIZED WASHER 14 X36 X3	RONDELLE 14 X36 X3 ZN	UNTERLEGSCHEIBE 14 X36 X3 ZN	ARANDELA 14 X36 X3 ZN
33	F03151208	RACCORDO L 2M1/2 F1/2 ZN	UNION L 1/2	RACCORD L ®	ANSCHLUSSTsCK L 1/2	UNIN L 1/2 R
34	F02050112	ANELLO E. DE 30X 1,5 U7435 C70	SEEGER RING 30X 1,5 U7435 C70	SEEGER E. 30 X 1,5 U7435 C70	SEEGERING E. 30X 1,5 U7435 C70	ANILLO E. 30 X 1,5 U7435 C70
35	F02050403	ANELLO E. DI 72X 2,5 U7437 C70	SEEGER RING E.72X2,5 U7437 C70	SEEGER E. 72X 2,5 U7437 C70	SEEGERING E. 72X 2,5 U7437 C70	ANILLO E. 72X 2,5 U7437 C70
36	F02150036	LINGUETTA 6X 6X 20 U6604A	TAB 06X6X20 UNI6604	LANGUETTE 06X6X20 UNI6604	FEDERKEIL 06X6X20 UNI6604	LENGsETA 06X6X20 UNI6604
37	F02150073	LINGUETTA 8X 7X 40 U6604A	KEY 8X7X40	CLEVETTE 8X7X40 UNI 6604	FEDER 8X7X40 UNI 6604	
38	G16150700	ASS.TUBO ASPIRAZ.SOFFIANTE				
39	F03150949	INNESTO RAP.FEMM.3/4 VALVOLA	QUICK-CONNECT 3/4 VALVE FEM.	PRISE A BILLE F/ELLE CONE 3/4	SCHNELLKUPPLUNG NUT 3/4	ACOPLA. RæP.HEMB.3/4 VæLVULA
40	F03151203	RACCORDO A GOMITO 1/2'	1/2' ANGLED UNION	RACCORD A COUDE ®'	WINKELANSCHLUSSTsCK 1/2'	CODO DE UNIN 1/2' R
41	F20120349	PUNTALE Q.50 ALETT.POLIT.NERO				
42	F03151237	RONDELLA RAME 21X27X1,5 -1/2"	1/2 COPPER WASHER	RONDELLE CUIVRE 1/2	UNTERLEGSCHEIBE KUPFER 1/2	ARANDELA COBRE 1/2
43	F03151239	RONDELLA RAME 27X35X1,5 -3/4"	3/4 COPPER WASHER	RONDELLE CUIVRE ¢	UNTERLEGSCHEIBE KUPFER 3/4	ARANDELA COBRE 3/4
44	F05150325	CAPPUCCIO PROT.INNESTO RAP.1/2	COVER 1/2	COUVERCLE 1/2	DECKEL 1/2	TAPA 1/2
45	G15355640	TUBO 1/2R2 CF1/2-F1/2 1250	TUBE 1/2R2 CF1/2-F1/2 1250	TUBE 1/2R2 CF1/2-F1/2 1250	ROHR 1/2R2 CF1/2-F1/2 1250	TUBO 1/2R2 CF1/2-F1/2 1250
46	G17311260	TUBO 1/2R2 CF1/2- L.700				
47	G20980086	BOCCOLA DIST.D.8,5X16X31	BUSHING SPAC.. D.8-5X16X31	BOITE ENTRETOISE D. 8-5X16X31	VERTEILERBsCHSE D.8-5X16X31	CASQUILLO DIST. D.8-5X16X31
48	F01020051	VITE M 6X 1X 90 U5737 8.8 ZN	BOLT 6X90 5737 8.G GALVANIZED	VIS 9X90 5737 8.G ZN	SCHRAUBE 6X90 5737 8.G ZN	TORNILLO 6X90 5737 8.G ZN
49	F01220011	DADO M 6X 1 D980 8 ZN	SELF LOCKING NUT M6	ECROU AUTOBL. M6	SELBSTSPERR.MUTTER M6	DADO AUTOBL. M6
50	F05150492	CAPPUCCIO INNESTO RAP.FEMM 3/4	CONNECTION CAP NUT 3/4	CAPUCHON ACCOUPLEMENT 3/4	HAUBE KUPPLUNG 3/4	CAPUCHON ACOPLAMIENTO 3/4
51	F03150233	NIPPLO MM CIL-CIL 1/2-3/4 ZG	NIPPLE 3/4 - 1/2 ZB	NIPPLE 3/4 - 1/2 ZB	NIPPEL T. 3/4 - 1/3 ZB	NIPLE 3/4 - 1/2 ZB
52	F03150255	NIPPLO MASCH.CIL.1/2-1/2 ZN	NIPLE 1/2"GAS	NIPLE 1/2"GAS	NIPLE 1/2"GAS	NIPLE 1/2"GAS
53	F03150524	VALVOLA DI MASSIMA V.M.P.1/2	MAXIMUM PRESSURE VALVE 1/2	VANNE DE S+CURIT+ V.M.P.1/2	DRUCKBEGRENZUNGSVENTIL 1/2	V-LVULA PRES. M-X. V.P.M.1/2
54	F03150540	VALVOLA PRIORIT.MANOM.P0558086	MANOMETER PRIORITY VALVE	VANNE PRIORITAIRE MANOM+TRE	PRIORIT-TSVENTIL MANOMETER	V-LVULA PRIORITARIA MANËMETRO
55	F03150576	VALVOLA UNID.IN LINEA 1/2	UNIDIRECTIONAL VALVE 1/2'	SOUPAPE UNIDIRECTIONNELLE 1/2'	SPERVENTIL 1/2'	VæLVULA UNIDIRECCINAL 1/2" V
56	F03150858	CURVA 90°F.GIREV.1/2 - M.1/2	ELBOW 90[F. SWIVEL 1/2 -M.1/2	COUDE 90[F.TOURN.1/2 - M.1/2	KNIESTUCK 90[F.DREHB.1/2 - M.	CURVA 90 F.GIRAT.1/2 - M.1/2C
57	F03150935	INNESTO RAP.MASCH.1/2 A VALV.	QUICK CONNECT MALE CONE 1/2 CO	CONNEXION RAPIDE MALE CONE 1/2	SCHNELLKUPPLUNG GEWINDE KONISC	ACOPLAMIENTO RAPIDO MACHO CONO

TAV. 110

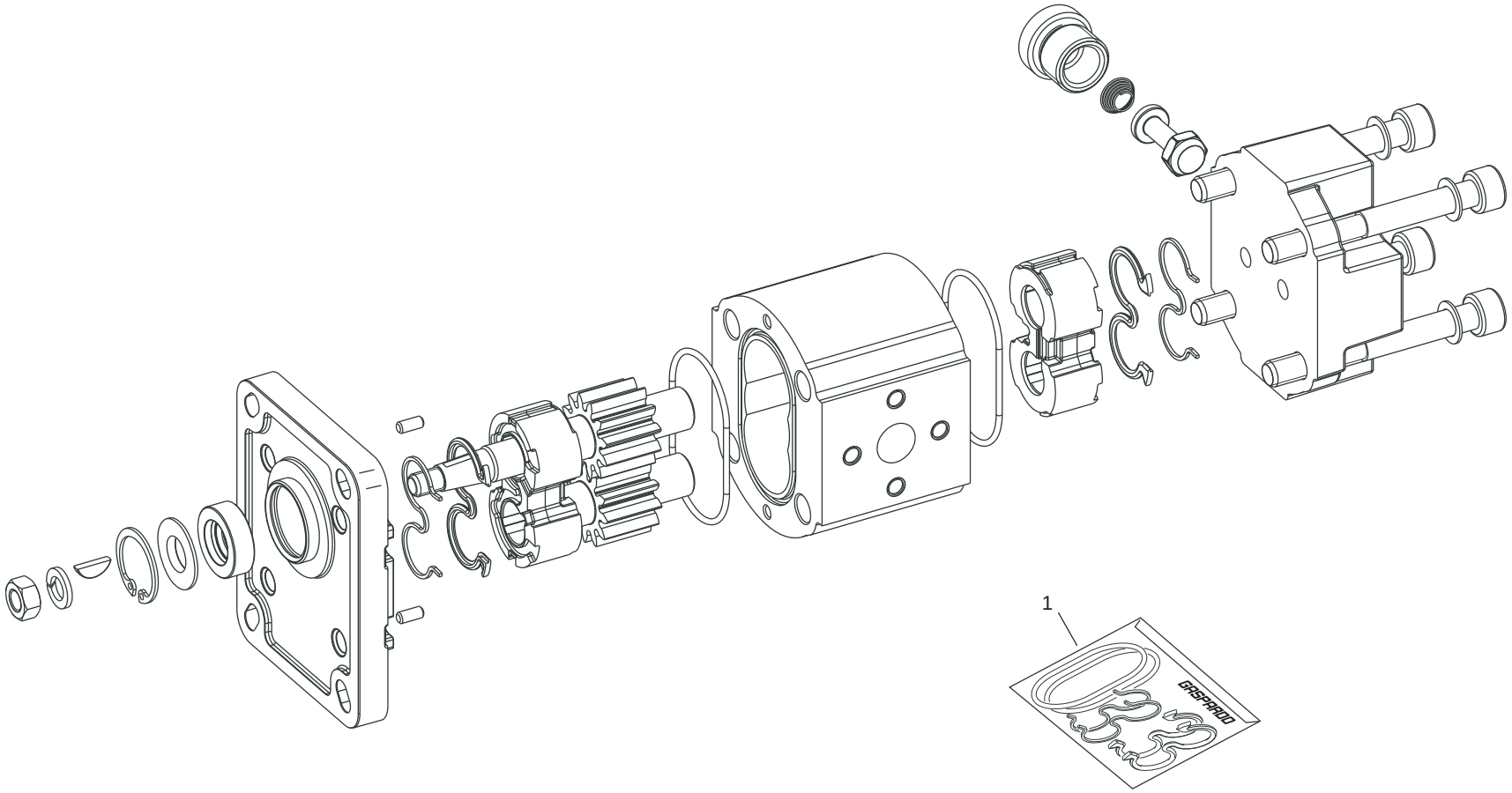

MOTORE UNIDIREZIONALE DX CIL. 5,9 KV-1U

TAV. 110

Pos.	Cod.	Descrizione	Description	Description	Benennung	Descripcion
1	F03100201	KIT GUARNIZ.MOTORE INGR.DX 5,9	HYDRAULIC MOTOR SET 67007449	KIT JOINTES MOTEUR G67007449	KIT DICHT. MOTOR 67007449	SET JUNTA MOTOR 67007449

TAV. 121

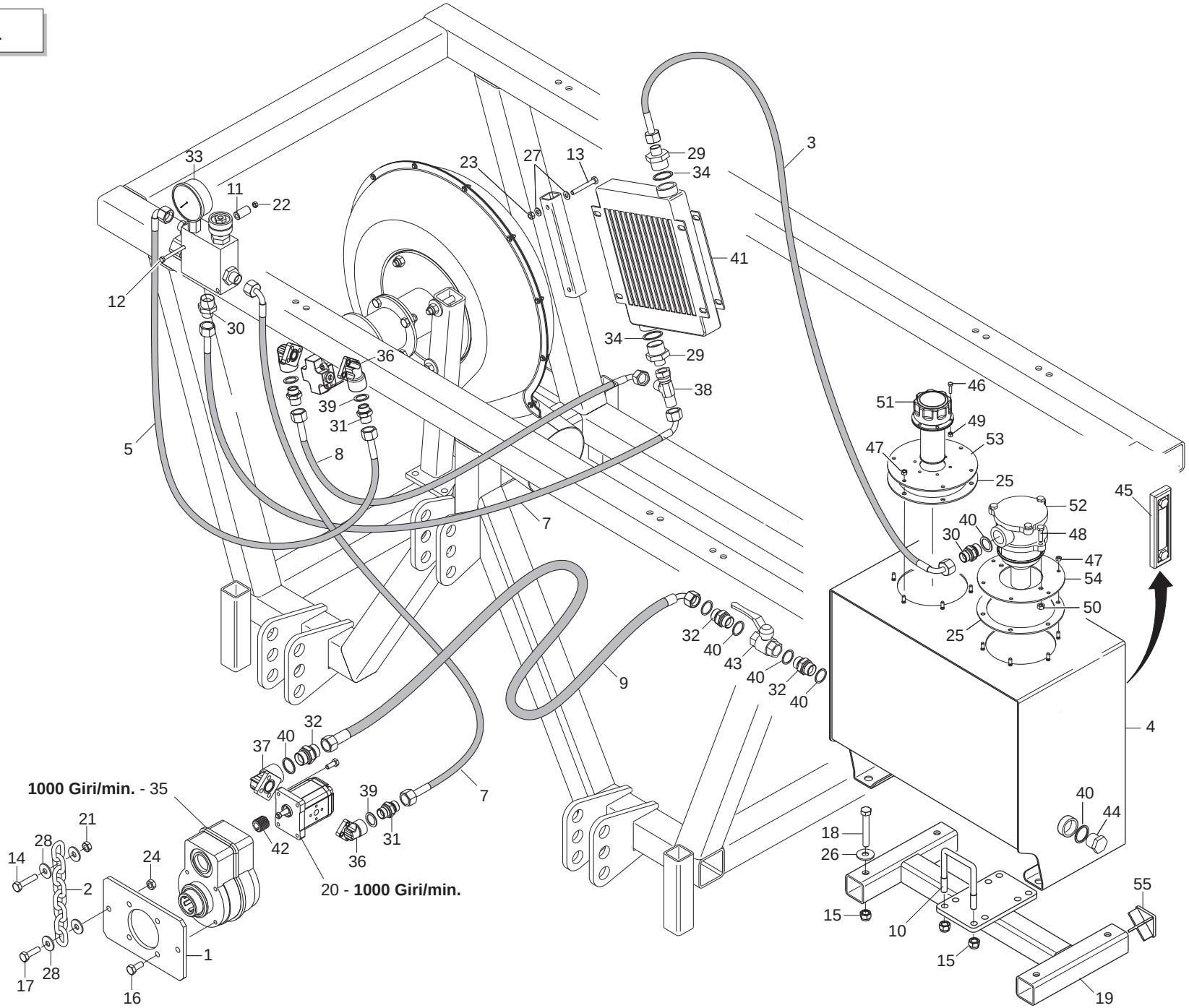

GASPARDO

IMPIANTO OLEODINAMICO INDIPENDENTE DA TRATTORE - PRESA DI FORZA ANTERIORE

TAV. 121

Pos.	Cod.	Descrizione	Description	Description	Benennung	Descripcion
1	G15355190	ATTACCO MOLTIPLICATORE	OVERGEAR COUPLING	FIXATION MULTIPLICATEUR	KUPPLUNG sBERSETZER	CONEXIN MULTIPLICADOR O
2	G12210460	CATENA GENOVESE D.8 L.584 ZN				
3	F03151171	MOLTIP.GIRI R.1:2 Z.6(1000 G)	SPIN MULTIPLIER 10 D12 P2 1000	MULTIPLICATEUR SPIN 10 D12 P2	sBERSETZER SPIN 10 D12 P2 1000	MULTIP. CLAVIJA 10 D12 P2 1000
4	G15355172	SERBATOIO OLIO	OIL TANK	COUVERCLE RESERVOIR	BEHZLTERDECKEL	TAPA DEPSITO
5	G15355630	TUBO 1/2R2 L.800	PIPE 1/2R2 L.800	TUBE 1/2R2 L. 800	ROHR 1/2R2 L.800	TUBO 1/2R2 L.800
6	G16111770	TUBO 1/2R2 CF-F1/2 L.1900				
7	G17310580	TUBO 1/2R2 CF-F1/2 L.1700				
8	G15355640	TUBO 1/2R2 CF1/2-F1/2 1250	TUBE 1/2R2 CF1/2-F1/2 1250	TUBE 1/2R2 CF1/2-F1/2 1250	ROHR 1/2R2 CF1/2-F1/2 1250	TUBO 1/2R2 CF1/2-F1/2 1250
9	G17310590	TUBO 3/4R2 CF-F3/4 L.1700	TUBE 3/4R2 CF-F3/4 L.1700	TUBE 3/4R2 CF-F3/4 L.1700	ROHR 3/4R2 CF-F3/4 L.1700	TUBO 3/4R2 CF-F3/4 L.1700
10	F20110745	CAV.Q.M12X1,75X 35 83X 96 ZN	U-BOLT M12 X PIPE 70X70	CAVALIER M12 POUR TUBE 70X70	BsGELBOLZEN M12 FsR ROHR 70X70	PERNO EN U M12 X TUBO 70X70
11	G20980086	BOCCOLA DIST.D.8,5X16X31	BUSHING SPAC.. D.8-5X16X31	BOITE ENTRETOISE D. 8-5X16X31	VERTEILERBsCHSE D.8-5X16X31	CASQUILLO DIST. D.8-5X16X31
12	F01020051	VITE M 6X 1X 90 U5737 8.8 ZN	BOLT 6X90 5737 8.G GALVANIZED	VIS 9X90 5737 8.G ZN	SCHRAUBE 6X90 5737 8.G ZN	TORNILLO 6X90 5737 8.G ZN
13	F01020077	VITE M 8X1,25X60 U5737 8.8 ZN	BOLT M 8X60	VIS M 8X60	SCHRAUBE M 8X60	TORNILLO M 8X60
14	F01020118	VITE M10X 1,5X60 U5737 8.8 ZN	BOLT 10X60 5737 8.G GALVANIZED	VIS 10X60 5737 8.G ZN	SCHRAUBE 10X60 5737 8.G ZN	TORNILLO 10X60 5737 8.G ZN
15	F01220048	DADO M12X1,75 D980 8 ZN	SELF LOCKING NUT M12X1,75 980V	ECROU AUTOBL. M12X1,75 980-V	SIEHE 00553312	DADO AUTOBL. M12X1,75 980-V
16	F01020470	VITE M10X 1,5X20 U5739 8.8 ZN	BOLT M 10X20	VIS M 10X20	SCHRAUBE M 10X20	TORNILLO M 10X20
17	F01020479	VITE M10X 1,5X35 U5739 8.8 ZN	BOLT M 10X35	VIS M 10X35	SCHRAUBE M 10X35	TORNILLO M 10X35
18	F01020166	VITE M12X1,75X80 U5737 8.8 ZN	BOLT 12X80 5737 8.G GALVANIZED	VIS 12X80 5737 8.G ZN	SCHRAUBE 12X80 5737 8.G ZN	TORNILLO 12X80 5737 8.G ZN
19	G17330620	ASS.SUPPORTO SERBATOIO				
20	F03151270	POMPA INGR.17 L. SX (1000 G.)				
21	F01200270	DADO M10X 1,5 U5588 6.8 ZN	NUT M10	ECROU M10	MUTTER M10	DADO M10
22	F01220011	DADO M 6X 1 D980 8 ZN	SELF LOCKING NUT M6	ECROU AUTOBL. M6	SELBSTSPERR.MUTTER M6	DADO AUTOBL. M6
23	F01220022	DADO M 8X1,25 D980 8 ZN	SELF LOCKING NUT M8X1,25 980V	ECROU AUTOBL. M8X1,25 980-V	SELBSTSP.MUTT. M8X1,25 980-V	DADO AUTOBL. M8X1,25 980-V
24	F01220033	DADO M10X 1,5 D980 8 ZN	NUT M10X 1,5 D980 8 ZB	ECRO.M10X 1,5 D980 8 ZB	MUTT.M10X 1,5 D980 8 ZB	TUER.M10X 1,5 D980 8 ZB
25	G15355720	GUARNIZIONE IMP.OLEOD.	SEAL	GARNITURE	DICHTUNG	JUNTA
26	F01410076	ROS.M12 13X 24X2,5 U6592 ZN	PLANE WASHER D12 UNI 6592 ZN	RONDELLE D12 UNI 6592 ZN	SCHEIBE D12 UNI 6592 ZN	ARANDELA D12 UNI 6592 ZN
27	F01420049	ROS.M8 8,4X 32X 2 U6593 ZN	WASHER M8 8,4X32X2 U6593 ZG	RONDELLE M8 8,4X32X2 U6593 ZG	SCHEIBE M8 8,4X32X2 U6593 ZG	ARANDELA M8 8,4X32X2 U6593 ZG
28	F01420060	ROS.M10 10,5X 30X2,5 U6593 ZN	WASHER 10,5X30	RONDELLE 10,5X30	SCHEIBE 10,5X30	ARANDELA 10,5X30
29	F03150180	NIPPLO MASCH.CIL.1-1/2 ZN.	MALE CYLINDER NIPPLE 1-1/2 ZN.	NIPPLE M-LE CYL.1-1/2 ZN.	NIPPEL.ZYL.1-1/2 ZN.	ENTRERROSCA MACH.CIL.1-1/2 ZN.
30	F03150233	NIPPLO MM CIL-CIL 1/2-3/4 ZG	NIPPLE 3/4 - 1/2 ZB	NIPPLE 3/4 - 1/2 ZB	NIPPEL T. 3/4 - 1/3 ZB	NIPLE 3/4 - 1/2 ZB
31	F03150255	NIPPLO MASCH.CIL.1/2-1/2 ZN	NIPLE 1/2"GAS	NIPLE 1/2"GAS	NIPLE 1/2"GAS	NIPLE 1/2"GAS
32	F03150299	NIPPLO MM CIL.CIL 3/4-3/4 ZN	NIPLES	NIPLES 3/4"GAS	NIPLES 3/4" GAS	NIPLE 3/4 - 3/4
33	F03150540	VALVOLA PRIORIT.MANOM.P0558086	MANOMETER PRIORITY VALVE	VANNE PRIORITAIRE MANOM+TRE	PRIORIT-TSVENTIL MANOMETER	V-LVULA PRIORITARIA MANËMETRO
34	F03150985	RONDELLA RAME 33,6X41X1,5 -1"	WASHER 1"	RONDELLE CUIVRE 1"	KUPFERSCHEIBE 1"	ARANDELA 1"
35	F03151171	MOLTIP.GIRI R.1:2 Z.6(1000 G)	SPIN MULTIPLIER 10 D12 P2 1000	MULTIPLICATEUR SPIN 10 D12 P2	sBERSETZER SPIN 10 D12 P2 1000	MULTIP. CLAVIJA 10 D12 P2 1000
36	F03151203	RACCORDO A GOMITO 1/2'	1/2' ANGLED UNION	RACCORD A COUDE ®'	WINKELANSCHLUSSTsCK 1/2'	CODO DE UNIN 1/2' R
37	F03151204	RACCORDO A GOMITO 3/4'	3/4' ANGLED UNION	RACCORD A COUDE ¢'	WINKELANSCHLUSSTsCK 3/4'	CODO DE UNIN 3/4' R
38	F03151208	RACCORDO L 2M1/2 F1/2 ZN	UNION L 1/2	RACCORD L ®	ANSCHLUSSTsCK L 1/2	UNIN L 1/2 R
39	F03151237	RONDELLA RAME 21X27X1,5 -1/2"	1/2 COPPER WASHER	RONDELLE CUIVRE 1/2	UNTERLEGSCHEIBE KUPFER 1/2	ARANDELA COBRE 1/2
40	F03151239	RONDELLA RAME 27X35X1,5 -3/4"	3/4 COPPER WASHER	RONDELLE CUIVRE ¢	UNTERLEGSCHEIBE KUPFER 3/4	ARANDELA COBRE 3/4
41	F03151248	SCAMBIATORE ARIA-OLIO	AIR-OIL HEAT EXCHANGER	ECHANGEUR AIR-HUILE A	USTAUSCHER LUFT/TL I	NTERCAMBIADOR AIRE-ACEITE S
42	F03151249	SEMIGIUNTO ALBERO CONICO POMPA	SEMI-COUPLING PUMP TAPER-SHAFT	SEMIJOINT-ENGR ARBRE CON POMPE	HALBKUPPLUNG KEGELWELLE PUMPE	SEMIJUNTA æRBOL CNICO BOMBA S
43	F03151247	SARACINESCA A LEVA F-F 3/4	LEVER-OPER. SLIDING VALVE 3/4	RIDEAU A LEVIER A LEVIER ¢	HEBELFALLTsR 3/4	COMPUERTA DE PALANCA 3/4
44	F03150720	TAPPO 3/4	PLUG 3/4	BOUCHON ¢	PFROPFEN 3/4	TAPN 3/4 D
45	F03151161	LIVELLO OLIO CON TERMOMETRO	OIL LEVEL WITH THERMOMETER	NIVEAU HUILE AVEC THERMOMETRE	ÍLSTAND MIT THERMOMETER	NIVEL ACEITE CON TERMOMETRO
46	F01020380	VITE M 5X0,8X 20 U5739 8.8 ZN	BOLT 5X20 5739 8.G GALVANIZED	VIS 5X20 5739 8.G ZN	SCHRAUBE 5X20 5739 8.G ZN	TORNILLO 5X20 5739 8.G ZN
47	F01230022	DADO M 6X 1 D982 8 ZN	NORM.SELF-LOCKING NUT 6 GALVAN	ECROU AUTOB.NOR.6 ZN	SELBSTSP. MUTTER NOR.6 ZN	TUERCA AUTOB. NOR. 6 ZN
48	F01020440	VITE M 8X1,25X25 U5739 8.8 ZN	BOLT M8 X25 5739 8.8 ZN	VIS M8 X25 5739 8.8 ZN	SCHRAUBE M8 X25 5739 8.8 ZN	TORNILLO M8 X25 5739 8.8 ZN
49	F01230019	DADO M 5X 0,8 D982 8 ZN	NORM.SELF-LOCKING NUT 5 GALVAN	ECROU AUTOB.NOR.5 ZN	SELBSTSP. MUTTER NOR.5 ZN	TUERCA AUTOB. NOR. 5 ZN
50	F01230034	DADO M 8X1,25 D982 8	SELF LOCKING NUT M8X1,25	ECROU AUTOBL. M8X1,25	SELBSTSP.MUTT. M8X1,25	DADO AUTOBL. M8X1,25
51	F03150716	TAPPO DI CARICAMENTO OLIO	OIL PLUG	BOUCHON HUILE	TLSCHRAUBE	TAPN ACEITE D
52	F03151147	FILTRO	FILTER	FILTRE	FILTER	FILTRO
53	G15355700	SUPPORTO TAPPO CAR.OLIO ZN	CLOSURE TAP SUPPORT	SUPPORT BOUCHON DE FERMETURE	HALTERUNG ABSCHLUSSPFROPFEN	SOPORTE TAPoN DE CIERRE
54	G15355710	SUPPORTO FILTRO OLIO DP ZN	CLOSURE FILTER	SUPPORT FILTRE	HALTERUNG FILTER	SOPORTE FILTRO
55	F20120349	PUNTALE Q.50 ALETT.POLIT.NERO				

TAV. 131

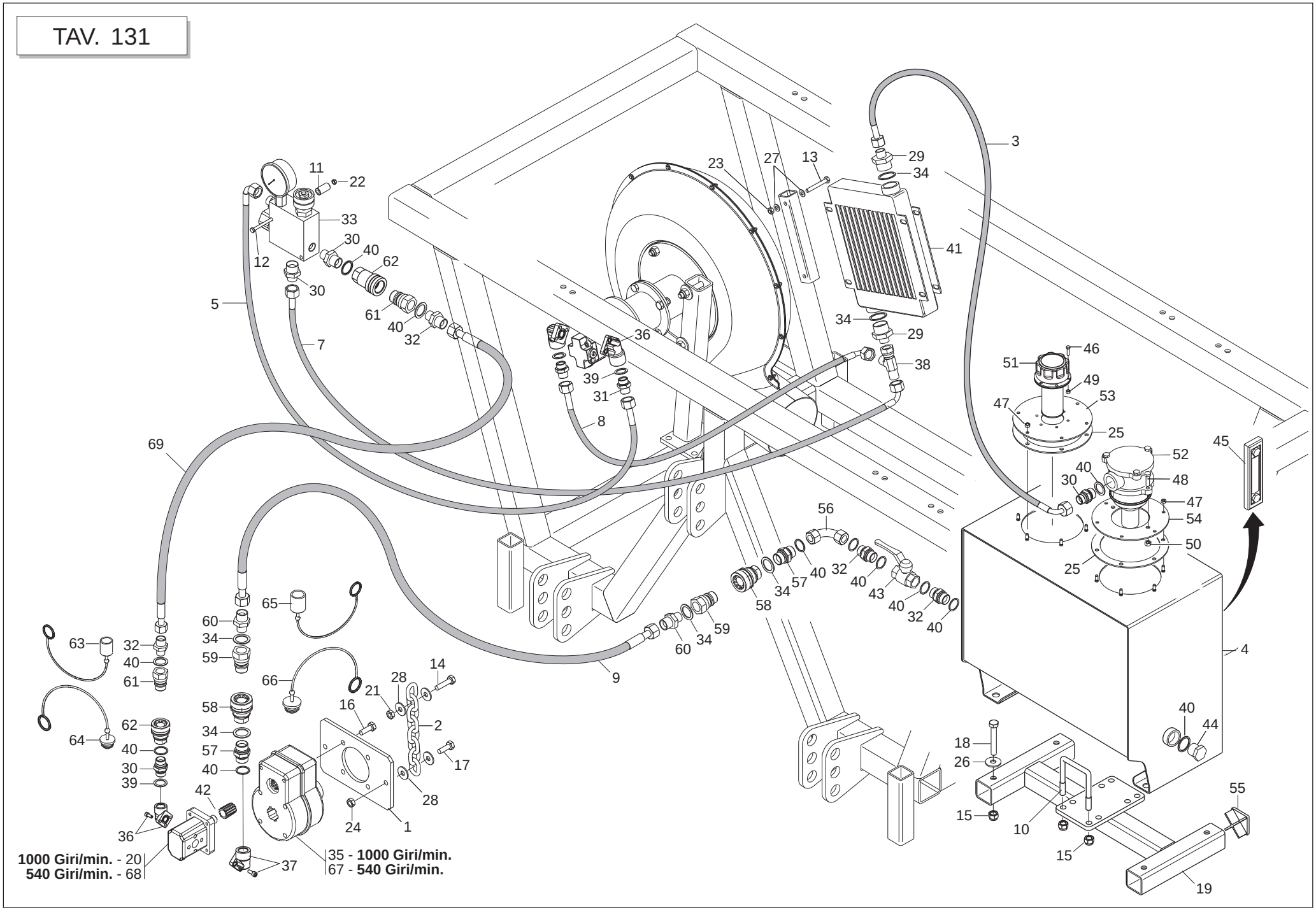

GASPARDO

IMPIANTO OLEODINAMICO INDIPENDENTE DA TRATTORE - PRESA DI FORZA POSTERIORE

TAV. 131

Pos.	Cod.	Descrizione	Description	Description	Benennung	Descripcion
1	G15355190	ATTACCO MOLTIPLICATORE	OVERGEAR COUPLING	FIXATION MULTIPLICATEUR	KUPPLUNG sBERSETZER	CONEXIN MULTIPLICADOR O
2	G12210460	CATENA GENOVESE D.8 L.584 ZN				
3	F03151171	MOLTIP.GIRI R.1:2 Z.6(1000 G)	SPIN MULTIPLIER 10 D12 P2 1000	MULTIPLICATEUR SPIN 10 D12 P2	sBERSETZER SPIN 10 D12 P2 1000	MULTIP. CLAVIJA 10 D12 P2 1000
4	G15355172	SERBATOIO OLIO	OIL TANK	COUVERCLE RESERVOIR	BEHZLTERDECKEL	TAPA DEPSITO
5	G15355630	TUBO 1/2R2 L.800	PIPE 1/2R2 L.800	TUBE 1/2R2 L. 800	ROHR 1/2R2 L.800	TUBO 1/2R2 L.800
6	G16111770	TUBO 1/2R2 CF-F1/2 L.1900				
7	G17310580	TUBO 1/2R2 CF-F1/2 L.1700				
8	G15355640	TUBO 1/2R2 CF1/2-F1/2 1250	TUBE 1/2R2 CF1/2-F1/2 1250	TUBE 1/2R2 CF1/2-F1/2 1250	ROHR 1/2R2 CF1/2-F1/2 1250	TUBO 1/2R2 CF1/2-F1/2 1250
9	G17311230	TUBO 1'R2 F1'-F1' L.9500				
10	F20110745	CAV.Q.M12X1,75X 35 83X 96 ZN	U-BOLT M12 X PIPE 70X70	CAVALIER M12 POUR TUBE 70X70	BsGELBOLZEN M12 FsR ROHR 70X70	PERNO EN U M12 X TUBO 70X70
11	G20980086	BOCCOLA DIST.D.8,5X16X31	BUSHING SPAC.. D.8-5X16X31	BOITE ENTRETOISE D. 8-5X16X31	VERTEILERBsCHSE D.8-5X16X31	CASQUILLO DIST. D.8-5X16X31
12	F01020051	VITE M 6X 1X 90 U5737 8.8 ZN	BOLT 6X90 5737 8.G GALVANIZED	VIS 9X90 5737 8.G ZN	SCHRAUBE 6X90 5737 8.G ZN	TORNILLO 6X90 5737 8.G ZN
13	F01020077	VITE M 8X1,25X60 U5737 8.8 ZN	BOLT M 8X60	VIS M 8X60	SCHRAUBE M 8X60	TORNILLO M 8X60
14	F01020118	VITE M10X 1,5X60 U5737 8.8 ZN	BOLT 10X60 5737 8.G GALVANIZED	VIS 10X60 5737 8.G ZN	SCHRAUBE 10X60 5737 8.G ZN	TORNILLO 10X60 5737 8.G ZN
15	F01220048	DADO M12X1,75 D980 8 ZN	SELF LOCKING NUT M12X1,75 980V	ECROU AUTOBL. M12X1,75 980-V	SIEHE 00553312	DADO AUTOBL. M12X1,75 980-V
16	F01020470	VITE M10X 1,5X20 U5739 8.8 ZN	BOLT M 10X20	VIS M 10X20	SCHRAUBE M 10X20	TORNILLO M 10X20
17	F01020479	VITE M10X 1,5X35 U5739 8.8 ZN	BOLT M 10X35	VIS M 10X35	SCHRAUBE M 10X35	TORNILLO M 10X35
18	F01020166	VITE M12X1,75X80 U5737 8.8 ZN	BOLT 12X80 5737 8.G GALVANIZED	VIS 12X80 5737 8.G ZN	SCHRAUBE 12X80 5737 8.G ZN	TORNILLO 12X80 5737 8.G ZN
19	G17330620	ASS.SUPPORTO SERBATOIO				
20	F03151187	POMPA AD INGR.19 L. (1000 G.)	GEAR PUMP 19 L.	POMPE A ENGRENAGES 19 L.	ZAHNRADPUMPE 19 L.	BOMBA DE ENGRANAJES 19 L.
21	F01200270	DADO M10X 1,5 U5588 6.8 ZN	NUT M10	ECROU M10	MUTTER M10	DADO M10
22	F01220011	DADO M 6X 1 D980 8 ZN	SELF LOCKING NUT M6	ECROU AUTOBL. M6	SELBSTSPERR.MUTTER M6	DADO AUTOBL. M6
23	F01220022	DADO M 8X1,25 D980 8 ZN	SELF LOCKING NUT M8X1,25 980V	ECROU AUTOBL. M8X1,25 980-V	SELBSTSP.MUTT. M8X1,25 980-V	DADO AUTOBL. M8X1,25 980-V
24	F01220033	DADO M10X 1,5 D980 8 ZN	NUT M10X 1,5 D980 8 ZB	ECRO.M10X 1,5 D980 8 ZB	MUTT.M10X 1,5 D980 8 ZB	TUER.M10X 1,5 D980 8 ZB
25	G15355720	GUARNIZIONE IMP.OLEOD.	SEAL	GARNITURE	DICHTUNG	JUNTA
26	F01410076	ROS.M12 13X 24X2,5 U6592 ZN	PLANE WASHER D12 UNI 6592 ZN	RONDELLE D12 UNI 6592 ZN	SCHEIBE D12 UNI 6592 ZN	ARANDELA D12 UNI 6592 ZN
27	F01420049	ROS.M8 8,4X 32X 2 U6593 ZN	WASHER M8 8,4X32X2 U6593 ZG	RONDELLE M8 8,4X32X2 U6593 ZG	SCHEIBE M8 8,4X32X2 U6593 ZG	ARANDELA M8 8,4X32X2 U6593 ZG
28	F01420060	ROS.M10 10,5X 30X2,5 U6593 ZN	WASHER 10,5X30	RONDELLE 10,5X30	SCHEIBE 10,5X30	ARANDELA 10,5X30
29	F03150180	NIPPLO MASCH.CIL.1-1/2 ZN.	MALE CYLINDER NIPPLE 1-1/2 ZN.	NIPPLE M-LE CYL.1-1/2 ZN.	NIPPEL.ZYL.1-1/2 ZN.	ENTRERROSCA MACH.CIL.1-1/2 ZN.
30	F03150233	NIPPLO MM CIL-CIL 1/2-3/4 ZG	NIPPLE 3/4 - 1/2 ZB	NIPPLE 3/4 - 1/2 ZB	NIPPEL T. 3/4 - 1/3 ZB	NIPLE 3/4 - 1/2 ZB
31	F03150255	NIPPLO MASCH.CIL.1/2-1/2 ZN	NIPLE 1/2"GAS	NIPLE 1/2"GAS	NIPLE 1/2"GAS	NIPLE 1/2"GAS
32	F03150299	NIPPLO MM CIL.CIL 3/4-3/4 ZN	NIPLES	NIPLES 3/4"GAS	NIPLES 3/4" GAS	NIPLE 3/4 - 3/4
33	F03150540	VALVOLA PRIORIT.MANOM.P0558086	MANOMETER PRIORITY VALVE	VANNE PRIORITAIRE MANOM+TRE	PRIORIT-TSVENTIL MANOMETER	V-LVULA PRIORITARIA MANËMETRO
34	F03150985	RONDELLA RAME 33,6X41X1,5 -1"	WASHER 1"	RONDELLE CUIVRE 1"	KUPFERSCHEIBE 1"	ARANDELA 1"
35	F03151171	MOLTIP.GIRI R.1:2 Z.6(1000 G)	SPIN MULTIPLIER 10 D12 P2 1000	MULTIPLICATEUR SPIN 10 D12 P2	sBERSETZER SPIN 10 D12 P2 1000	MULTIP. CLAVIJA 10 D12 P2 1000
36	F03151203	RACCORDO A GOMITO 1/2'	1/2' ANGLED UNION	RACCORD A COUDE ®'	WINKELANSCHLUSSTsCK 1/2'	CODO DE UNIN 1/2' R
37	F03151204	RACCORDO A GOMITO 3/4'	3/4' ANGLED UNION	RACCORD A COUDE ¢'	WINKELANSCHLUSSTsCK 3/4'	CODO DE UNIN 3/4' R
38	F03151208	RACCORDO L 2M1/2 F1/2 ZN	UNION L 1/2	RACCORD L ®	ANSCHLUSSTsCK L 1/2	UNIN L 1/2 R
39	F03151237	RONDELLA RAME 21X27X1,5 -1/2"	1/2 COPPER WASHER	RONDELLE CUIVRE 1/2	UNTERLEGSCHEIBE KUPFER 1/2	ARANDELA COBRE 1/2
40	F03151239	RONDELLA RAME 27X35X1,5 -3/4"	3/4 COPPER WASHER	RONDELLE CUIVRE ¢	UNTERLEGSCHEIBE KUPFER 3/4	ARANDELA COBRE 3/4
41	F03151248	SCAMBIATORE ARIA-OLIO	AIR-OIL HEAT EXCHANGER	ECHANGEUR AIR-HUILE A	USTAUSCHER LUFT/TL I	NTERCAMBIADOR AIRE-ACEITE S
42	F03151249	SEMIGIUNTO ALBERO CONICO POMPA	SEMI-COUPLING PUMP TAPER-SHAFT	SEMIJOINT-ENGR ARBRE CON POMPE	HALBKUPPLUNG KEGELWELLE PUMPE	SEMIJUNTA æRBOL CNICO BOMBA S
43	F03151247	SARACINESCA A LEVA F-F 3/4	LEVER-OPER. SLIDING VALVE 3/4	RIDEAU A LEVIER A LEVIER ¢	HEBELFALLTsR 3/4	COMPUERTA DE PALANCA 3/4
44	F03150720	TAPPO 3/4	PLUG 3/4	BOUCHON ¢	PFROPFEN 3/4	TAPN 3/4 D
45	F03151161	LIVELLO OLIO CON TERMOMETRO	OIL LEVEL WITH THERMOMETER	NIVEAU HUILE AVEC THERMOMETRE	ÍLSTAND MIT THERMOMETER	NIVEL ACEITE CON TERMOMETRO
46	F01020380	VITE M 5X0,8X 20 U5739 8.8 ZN	BOLT 5X20 5739 8.G GALVANIZED	VIS 5X20 5739 8.G ZN	SCHRAUBE 5X20 5739 8.G ZN	TORNILLO 5X20 5739 8.G ZN
47	F01230022	DADO M 6X 1 D982 8 ZN	NORM.SELF-LOCKING NUT 6 GALVAN	ECROU AUTOB.NOR.6 ZN	SELBSTSP. MUTTER NOR.6 ZN	TUERCA AUTOB. NOR. 6 ZN
48	F01020440	VITE M 8X1,25X25 U5739 8.8 ZN	BOLT M8 X25 5739 8.8 ZN	VIS M8 X25 5739 8.8 ZN	SCHRAUBE M8 X25 5739 8.8 ZN	TORNILLO M8 X25 5739 8.8 ZN
49	F01230019	DADO M 5X 0,8 D982 8 ZN	NORM.SELF-LOCKING NUT 5 GALVAN	ECROU AUTOB.NOR.5 ZN	SELBSTSP. MUTTER NOR.5 ZN	TUERCA AUTOB. NOR. 5 ZN
50	F01230034	DADO M 8X1,25 D982 8	SELF LOCKING NUT M8X1,25	ECROU AUTOBL. M8X1,25	SELBSTSP.MUTT. M8X1,25	DADO AUTOBL. M8X1,25
51	F03150716	TAPPO DI CARICAMENTO OLIO	OIL PLUG	BOUCHON HUILE	TLSCHRAUBE	TAPN ACEITE D
52	F03151147	FILTRO	FILTER	FILTRE	FILTER	FILTRO
53	G15355700	SUPPORTO TAPPO CAR.OLIO ZN	CLOSURE TAP SUPPORT	SUPPORT BOUCHON DE FERMETURE	HALTERUNG ABSCHLUSSPFROPFEN	SOPORTE TAPoN DE CIERRE
54	G15355710	SUPPORTO FILTRO OLIO DP ZN	CLOSURE FILTER	SUPPORT FILTRE	HALTERUNG FILTER	SOPORTE FILTRO
55	F20120349	PUNTALE Q.50 ALETT.POLIT.NERO				
56	F03150857	CURVA 90°F.G.3/4 - F.G.3/4	ELBOW 90 3/4 C	OUDE 90 ¢ KN	IESTsCK 90 3/4 CUR	VA 90 3/4 COT
57	F03150191	NIPPLO MM CIL-CIL 1 -3/4 ZN	NIPLES	NIPLES 1" 3/4 GAS	NIPLES 1"-3/4" GAS	0
58	F03150947	INNESTO RAP.FEMM.1 A VALV.				
59	F03150934	INNESTO RAP.MASCH.1 A VALV.				
60	F03150202	NIPPLO MM CIL-CIL 1 -1 ZG				
61	F03150936	INNESTO RAP.MASCH.3/4 A VALV.	QUICK CONNECT MALE CONE 3/4 CO	PRISE A BILLE MALE CONE 3/4	SCHNELLKUPPLUNG GEWINDE KONISC	ACOPLAMIENTO RæPIDO MACHO CONO
62	F03150949	INNESTO RAP.FEMM.3/4 VALVOLA	QUICK-CONNECT 3/4 VALVE FEM.	PRISE A BILLE F/ELLE CONE 3/4	SCHNELLKUPPLUNG NUT 3/4	ACOPLA. RæP.HEMB.3/4 VæLVULA
63	F05150493	TAPPO INNESTO MASCHIO TF34	TF 34 MALE CONNECTION PLUG	CLAPET ACCOUPLEMENT MALE TF34	PFROPFEN KUPPLUNG GEWINDEZAPFE	TAPAACOPLAMIENTO MACHO TF34
64	F05150492	CAPPUCCIO INNESTO RAP.FEMM 3/4	CONNECTION CAP NUT 3/4	CAPUCHON ACCOUPLEMENT 3/4	HAUBE KUPPLUNG 3/4	CAPUCHON ACOPLAMIENTO 3/4
65	F05150324	CAPPUCCIO PROT.INNESTO RAP.1"				
66	F05150323	CAPPUCCIO INNESTO RAP.FEMM.1"				
67	F06260022	MOLTIP.GIRI R.1:3 Z.6 540 G.	OVERDRIVE 1:3	MULTIPLICATEUR TOURS 1:3	DREHZAHLsBERSETZER 1:3	MULTIPLICADOR REVOL.1:3
68	F03151188	POMPA AD INGR.22 L. (540 G.)	GEAR PUMP 22L.	POMPE A ENGRENAGES 22L. 540T	ZAHNRADPUMPE 22L.	BOMBA DE ENGRANAJES 22L.
69	G16022160	TUBO 3/4 L.9500	PIPE 3/4 L.9500	TUBE 3/4 L. 9500	ROHR 3/4 L.9500	TUBO 3/4 L.9500

TAV. 140

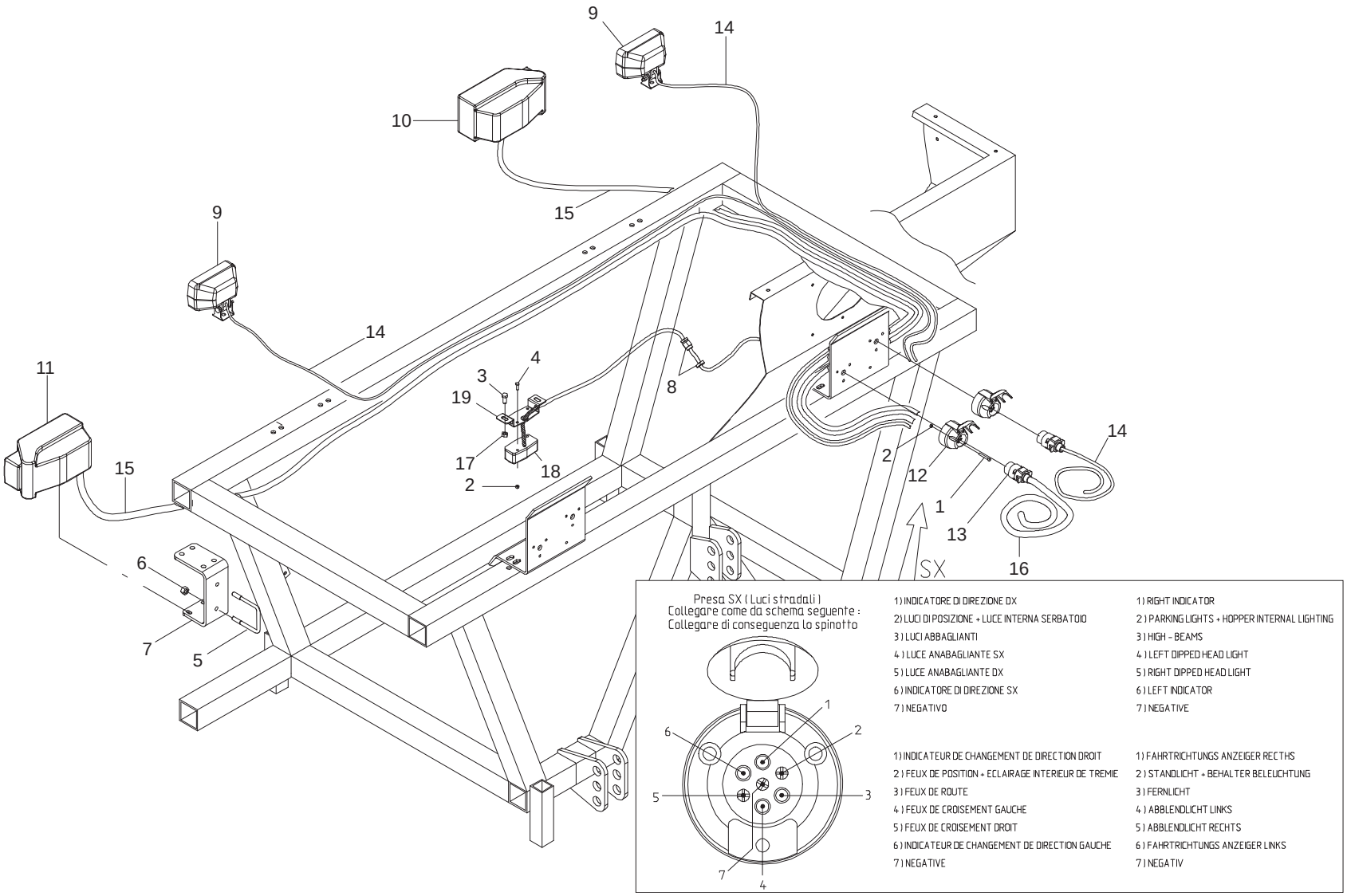

1) INDICATORE DI DIREZIONE DX	1) RIGHT INDICATOR
2) LUCI DI POSIZIONE + LUCE INTERNA SERBATOIO	2) PARKING LIGHTS + HOPPER INTERNAL LIGHTING
3) LUCI ABBAGLIANTI	3) HIGH - BEAMS
4) LUCE ANABAGLIANTE SX	4) LEFT DIPPED HEAD LIGHT
5) LUCE ANABAGLIANTE DX	5) RIGHT DIPPED HEAD LIGHT
6) INDICATORE DI DIREZIONE SX	6) LEFT INDICATOR
7) NEGATIVO	7) NEGATIVE
1) INDICATEUR DE CHANGEMENT DE DIRECTION DROIT	1) FAHRTRICHTUNGS ANZEIGER RECTHS
2) FEUX DE POSITION + ECLAIRAGE INTERIEUR DE TREMIE	2) STANDLICHT + BEHALTER BELEUCHTUNG
3) FEUX DE ROUTE	3) FERNLICHT
4) FEUX DE CROISEMENT GAUCHE	4) ABBLENDLICHT LINKS
5) FEUX DE CROISEMENT DROIT	5) ABBLENDLICHT RECHTS
6) INDICATEUR DE CHANGEMENT DE DIRECTION GAUCHE	6) FAHRTRICHTUNGS ANZEIGER LINKS
7) NEGATIVE	7) NEGATIV

KIT LUCI ANTERIORE

TAV. 140

Pos.	Cod.	Descrizione	Description	Description	Benennung	Descripcion
1	F01040044	VITE M 5X 0,8X35 U5931 8.8 ZN	BOLT 5X35 5931 8.G GALVANIZED	VIS 5X35 5931 8.G ZN	SCHRAUBE 5X35 5931 8.G ZN	TORNILLO 5X35 5931 8.G ZN
2	F01230019	DADO M 5X 0,8 D982 8 ZN	NORM.SELF-LOCKING NUT 5 GALVAN	ECROU AUTOB.NOR.5 ZN	SELBSTSP. MUTTER NOR.5 ZN	TUERCA AUTOB. NOR. 5 ZN
3	F01020436	VITE M 8X1,25X 20 U5739 8.8 ZN	BOLT M 8X20	VIS M 8X20	SCHRAUBE M 8X20	TORNILLO M 8X20
4	F01020378	VITE M5X 0,8X 16 U5739 8.8 ZN	BOLT 5X16 5739 8.G GALVANIZED	VIS 5X16 5739 8.G ZN	SCHRAUBE 5X16 5739 8.G ZN	TORNILLO 5X16 5739 8.G ZN
5	F20110745	CAV.Q.M12X1,75X 35 83X 96 ZN	U-BOLT M12 X PIPE 70X70	CAVALIER M12 POUR TUBE 70X70	BsGELBOLZEN M12 FsR ROHR 70X70	PERNO EN U M12 X TUBO 70X70
6	F01220048	DADO M12X1,75 D980 8 ZN	SELF LOCKING NUT M12X1,75 980V	ECROU AUTOBL. M12X1,75 980-V	SIEHE 00553312	DADO AUTOBL. M12X1,75 980-V
7	G17310760	STAFFA PORTA FARI				
8	F05010363	PRESSACAVO PG16	CABLE PRESS PG16	PRESSE-CABLE PG16	KABELPRESSE PG16	APRIETACABLE PG16
9	G67201102	FARO DA LAVORO CON SNODO				
10	F05010314	FANALE+FRECCIA ANT.DX				
11	F05010315	FANALE+FRECCIA ANT.SX				
12	F05010361	PRESA 7 POLI FEMMINA				
13	F05010058	SPINA 7 POLI ISO 1724				
14	F05010228	CAVO ELETTRICO 2X 1,5 MMQ				
15	F05010229	CAVO ELETTRICO 5G 1,5 MMQ				
16	F05010230	CAVO ELETTRICO 7G 1,5 MMQ				
17	F01230034	DADO M 8X1,25 D982 8	SELF LOCKING NUT M8X1,25	ECROU AUTOBL. M8X1,25	SELBSTSP.MUTT. M8X1,25	DADO AUTOBL. M8X1,25
18	F05010313	FANALE BIANCO				
19	G15318000	SUPPORTO LUCE SERBATOIO				

TAV. 151

Versione SEME / SEED version

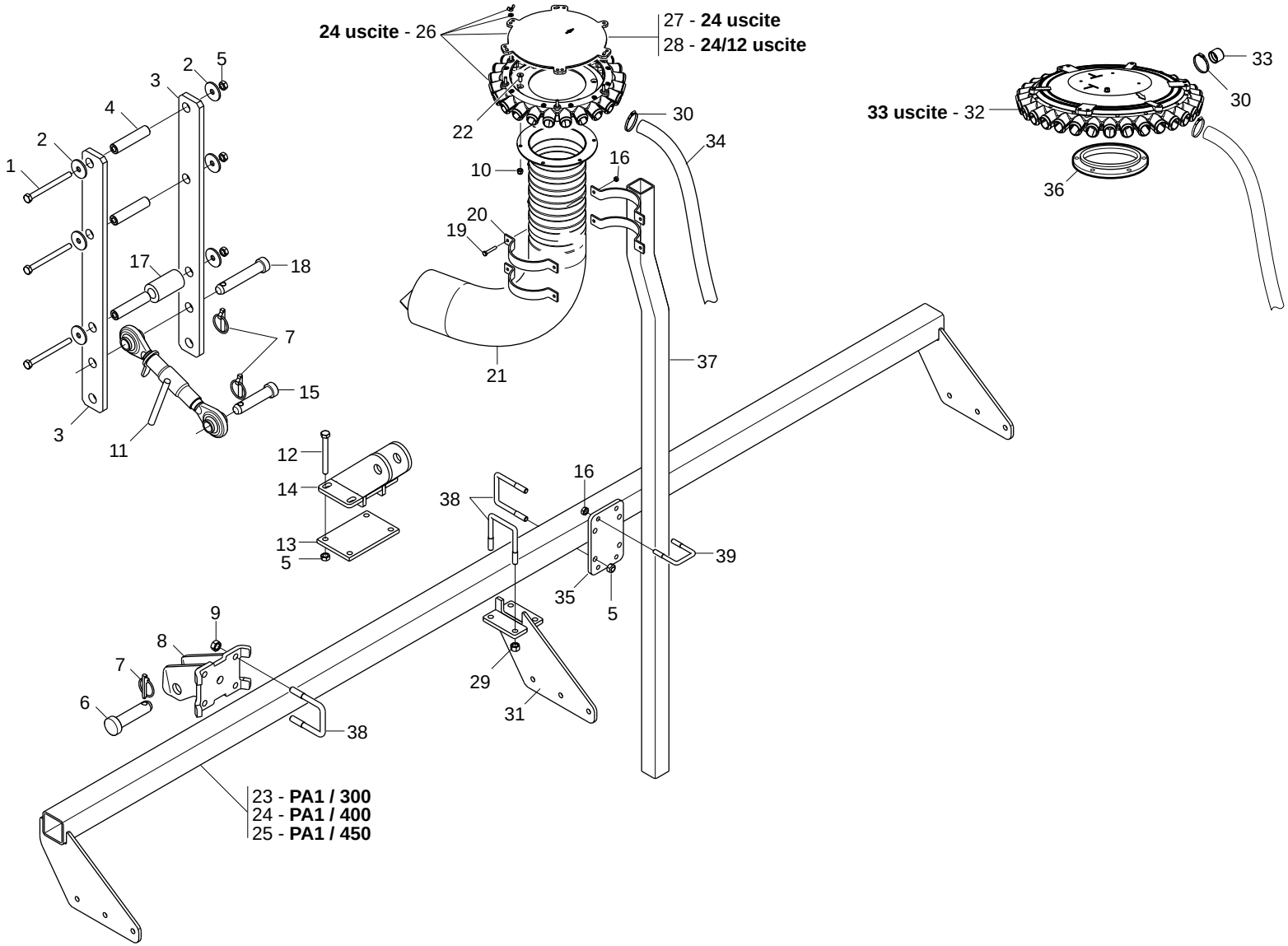

GASPARDO

TELAIO SUPPORTO ELEMENTI (SEME / SEED)

TAV. 151

Pos.	Cod.	Descrizione	Description	Description	Benennung	Descripcion
1	F01020177	VITE M12X1,75X140 5737 8.8 ZN	BOLT M12X1,75X140 U5737 8.8 ZG	VIS M12X1,75X140 U5737 8.8 ZG	SCHRAUBE M12X1,75X140 U5737 8.	TORNIL. M12X1,75X140 U5737 8.8
2	G18701530	RONDELLA 13X48X4 ZN	WASHER 13X48X4 ZN	RONDELLE 13X48X4 ZN	UNTERLEGSCHEIBE 13X48X4 ZN	ARANDELA 13X48X4 ZN
3	G17311531	LAMA ATTACCO TERZO PUNTO				
4	G13641770	PERNO 25X112	BUSHING 12,4X25X112	BOITE 12,4X25X112	BUCHSE 12,4X25X112	MANGUITO 12,4X25X112
5	F01220048	DADO M12X1,75 D980 8 ZN	SELF LOCKING NUT M12X1,75 980V	ECROU AUTOBL. M12X1,75 980-V	SIEHE 00553312	DADO AUTOBL. M12X1,75 980-V
6	F20100078	PERNO D28 L93 C43 ZN	PIN D.28	GOUJON D.28	BOLZEN D.28	PERNO D.28
7	F02200507	SPINA SCATTO D. 9 B/83 ZN	SNAP PIN D 9 B/83	FICHE A DETENTE D 9 B/83	EINRASTSTIFT D 9 B/83	CLAVIJA DE MUELLE D 9 B/83
8	G17310940	ATTACCO 1-2 P.BARRA ELEM.				
9	F01200306	DADO M14X 2 U5588 6.8 ZN	NUT M14X2	ECROU M14X2	MUTTER M14X2	DADO M14X2
10	F01230034	DADO M 8X1,25 D982 8	SELF LOCKING NUT M8X1,25	ECROU AUTOBL. M8X1,25	SELBSTSP.MUTT. M8X1,25	DADO AUTOBL. M8X1,25
11	F20300001	MART*M.L= 350 L= 286 D=25,5 ZN				
12	F01020172	VITE M12X1,75X110 5737 8.8 ZN	BOLT 12X110 5737 8.G GALVANIZ.	VIS 12X110 5737 8.G ZN	SCHRAUBE 12X110 5737 8.G ZN	TORNILLO 12X110 5737 8.G ZN
13	G16030420	SCONTRO 170X110	STRIKER PLATE 170X110	BUTEE 170X110	ANSCHLAG 170X110	ELEMENTO DE EMPALME 170X110
14	G17310980	ATTACCO 3 P.BARRA ELEM.				
15	F20100063	PERNO D25 L91 C40 ZN	PIN GASPARDO D25 L113 C40	PIVOT GASPARDO D25 L113 C40	BOLZEN GASPARDO D25 L113 C40	PERNO GASPARDO D25 L113 C40
16	F01220033	DADO M10X 1,5 D980 8 ZN	NUT M10X 1,5 D980 8 ZB	ECRO.M10X 1,5 D980 8 ZB	MUTT.M10X 1,5 D980 8 ZB	TUER.M10X 1,5 D980 8 ZB
17	G17311541	BOCCOLA 26,3 X48,3 X87				
18	F20100062	SPINA GASPARDO 25X128 ZN	FOR 3RD POINT	GOUJON 3EME POINT	BOLZEN 3. PUNKT	PERNO 3 PUNTO
19	F01020479	VITE M10X 1,5X35 U5739 8.8 ZN	BOLT M 10X35	VIS M 10X35	SCHRAUBE M 10X35	TORNILLO M 10X35
20	G16124400	FASCETTA TUBO D.150 ZN				
21	G17322040	ASS.TUBO MISC.CORTO CURVA 90				
22	F01030055	VITE M 8X1,25X20 U5933 10.9 ZD	BOLT M 8X20	VIS M 8X20	SCHRAUBE M 8X20	TORNILLO M 8X20
23	G16041320	SUPPORTO BARRA SEMINA 300	BAR SUPPORT 300	SUPPORT BARRE 300	HALTERUNG STANGE 300	SOPORTE BARRA 300
24	G16041350	SUPPORTO BARRA SEMINA 400	BAR SUPPORT 400	SUPPORT BARRE 400	HALTERUNG STANGE 400	SOPORTE BARRA 400
25	G16042990	SUPPORTO BARRA SEMINA 450				
26	G17321880	DISTRIBUTORE 24 U.X TUBO D.150				
27	G68005085	COPERCHIO DISTRIBUTORE 24 USC.	DISTRIBUTOR COVER 24 OUTPUTS	COUVERCLE DISTRIBUTEUR 24 SORT	DECKEL SZAPPARAT 24 AUSGZNG	TAPA DISTRIBUIDOR 24 SALIDAS
28	G68005080	COPERCHIO DISTRIBUTORE 24/12	DISTRIBUTOR COVER 24/12	COUVERCLE DISTRIBUTEUR 24/12	DECKEL SZAPPARAT 24/12	TAPA DISTRIBUIDOR 24/12
29	F01230059	DADO M12X1,75 D982 8 ZN	NUT M12X1,75 D982 8 ZB	ECRO.M12X1,75 D982 8 ZB	MUTT.M12X1,75 D982 8 ZB	TUER.M12X1,75 D982 8 ZB
30	F02300020	FASCETTA STRING. 32/50 H.9	STRING FASTEN.STRAPS 32/50 H.9	COLLIER 32/50 H.9	SCHELLE 32/50 H.9	ABRAZADERA 32/50 H.8
31	G16041340	SUPPORTO CENTR.BARRA SEMINA	BAR SUPPORT	SUPPORT BARRE	HALTERUNG STANGE	SOPORTE BARRA
32	G16124410	DISTRIBUTORE 33 U. D.150				
33	G66248098	TAPPO CONVOGLIATORE DEPR. SP	AIR PUMP CONVEYOR PLUG SP	BOUCHON CONVOYEUR TURBINE SP	VAKUUM FTRDERPFROPFEN SP	TAPN CONDUCTOR DEPR. SP D
34	F03100530	TUBO EOLO PU-P D.32	SATURNO PIPE PU-P D.32	TUBE SATURNO PU-P D.32	ROHR SATURNO PU-P D.32	TUBO SATURNO PU-P D.32
35	G17311520	PIASTRA DI REGOLAZ.ALT.FUNGO				
36	G17322090	GUARNIZIONE DISTRIBUTORE				
37	G17322080	ASS.SUPPORTO TUBO MISCELATORE				
38	F20110745	CAV.Q.M12X1,75X 35 83X 96 ZN	U-BOLT M12 X PIPE 70X70	CAVALIER M12 POUR TUBE 70X70	BsGELBOLZEN M12 FsR ROHR 70X70	PERNO EN U M12 X TUBO 70X70
39	F20110715	CAV.Q.M10X 1,5X 30 61X 80 ZN				

TAV. 161

Versione SEME / SEED version

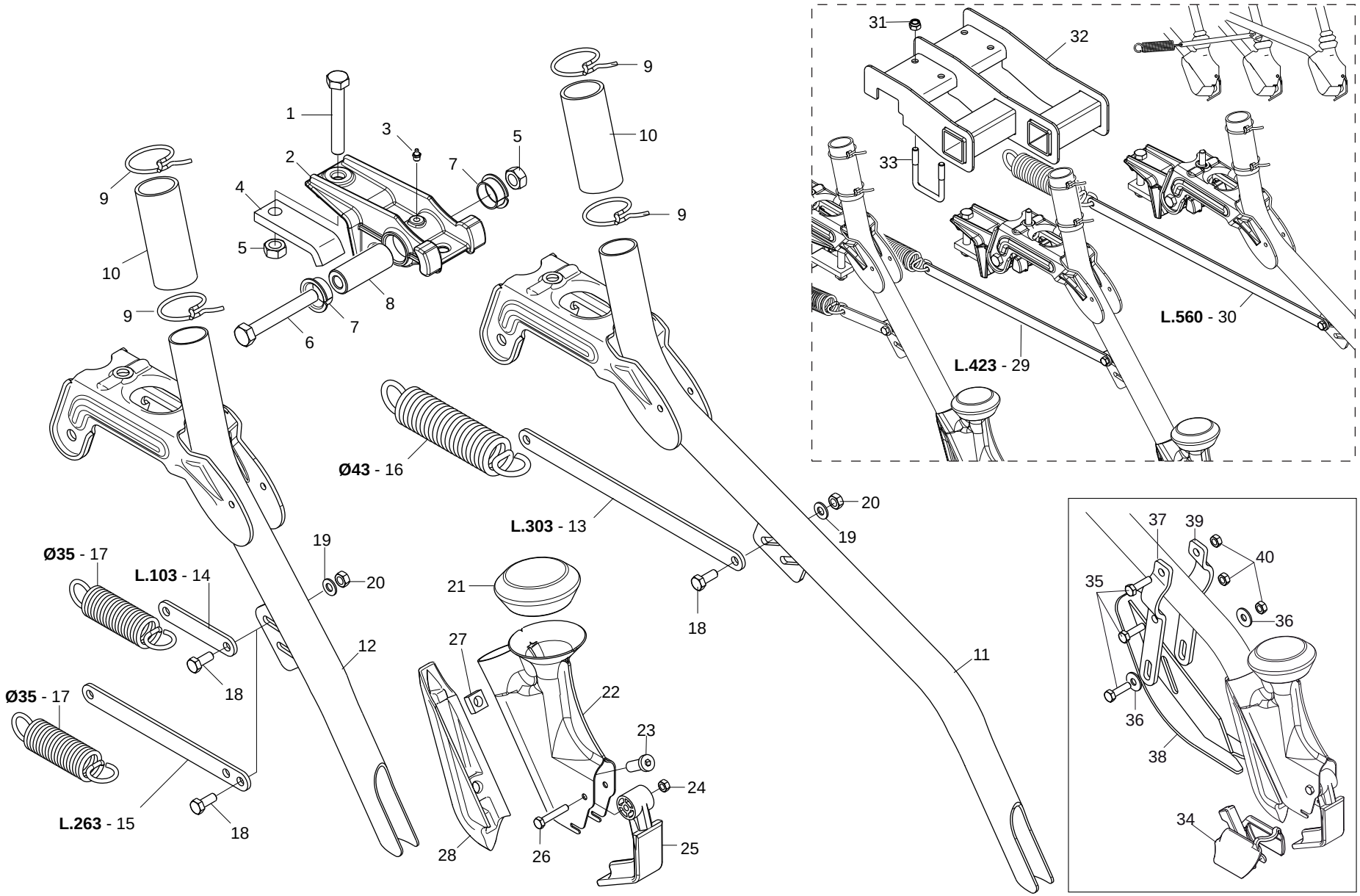

GASPARDO

ASSOLCATORI A STIVALETTO

TAV. 161

Pos.	Cod.	Descrizione	Description	Description	Benennung	Descripcion
1	F01020166	VITE M12X1,75X80 U5737 8.8 ZN	BOLT 12X80 5737 8.G GALVANIZED	VIS 12X80 5737 8.G ZN	SCHRAUBE 12X80 5737 8.G ZN	TORNILLO 12X80 5737 8.G ZN
2	G16340801	SUPPORTO SCARPETTA				
3	F01100011	ING.M 6X1 7663-A 9SMNPB28 ZN	SPHERE NIPPLE M6X1/A	GRAISSEUR A BILLES M6X1/A	KUGELFETTBsCHSE M6X1/A	ENGRAS. DE ESFERAS M6X1/A
4	G16340810	SCONTRO DI FISSAGGIO	FIXING STRIKER PLATE	BUTEE DE FIXATION	BEFESTIGUNGSANSCHLAG	ELEM. DE EMPALME DE SUJECION
5	F01220048	DADO M12X1,75 D980 8 ZN	SELF LOCKING NUT M12X1,75 980V	ECROU AUTOBL. M12X1,75 980-V	SIEHE 00553312	DADO AUTOBL. M12X1,75 980-V
6	F01020168	VITE M12X1,75X90 U5737 8.8 ZN	BOLT 12X90 5737 8.G GALVANIZED	VIS 12X90 5737 8.G ZN	SCHRAUBE 12X90 5737 8.G ZN	TORNILLO 12X90 5737 8.G ZN
7	F04150034	CUSCINETTO FLANGIATO 25X28X16				
8	G18802740	BOCCOLA 25X12X63,5	BUSHING 25X12X63,5	BOITE 25X12X63,5	BUCHSE 25X12X63,5	CASQUILLO 25X12X63,5
9	G65336001	MOLLA SPEC.ZN STRING.CONC. SP	SPEC SPRING ZN MAN. PIPE CLAMP	RESSORT SPEC. ZN SERRE-TUBE LO	SPEZIALFEDER ZN DsNGERSCHELLE.	MUELLE ESPEC. ZN APLASTA ABONO
10	G19005340	MANICOTTO DI GIUNZIONE	JOINT SLEEVE	MANCHON DE RACCORD	VERBINDUNGSMUFFE	MANGUITO DE UNIN
11	G16244041	TUBO LUNGO BASSO				
12	G16042171	TUBO CORTO BASSO				
13	G16042680	TIRANTE L.303				
14	G16042500	TIRANTE L.103				
15	G16042510	TIRANTE L.263				
16	G18904360	MOLLA TENSIONAM.ELEM.LUNGO	SPRING	RESSORT	FEDER	MUELLE
17	G18904350	MOLLA TENSIONAM.ELEM.CORTO ZN	DRILL COULTER TENS. SPRING	RESSORT TENDEUR SOC	EDER SZSCHARSPANNUNG	UELLE TENSIN SURCADOR
18	F01020436	VITE M 8X1,25X 20 U5739 8.8 ZN	BOLT M 8X20	VIS M 8X20	SCHRAUBE M 8X20	TORNILLO M 8X20
19	F01410051	ROS.M8 8,4X 17X1,6 U6592 ZN	PLANE WASHER D.8	RONDELLE D.8	SCHEIBE D.8	ARANDELA D.8
20	F01220022	DADO M 8X1,25 D980 8 ZN	SELF LOCKING NUT M8X1,25 980V	ECROU AUTOBL. M8X1,25 980-V	SELBSTSP.MUTT. M8X1,25 980-V	DADO AUTOBL. M8X1,25 980-V
21	G19003270	CUFFIA TUBO SCARPETTA	SLIDE PIPE HOUSING	BOUCHON TUBE SABOT	KASTEN ROHR SCHUH	ENVOLTURA TUBO GUA APOYO G
22	G16243990	SCARPETTA INTERCAMBIABILE	CUTTER	HACHOIR	SAASCHAR	HOJA DE CORTE
23	F01040600	VIT.M10X X 30 U9327 8.8 ZN	SCREW M10X X30 9327 8.8	VIS M410X X30 9327 8.8 Z	SCHRAUBE M10X X30 9327 8	TORNIL. M10X X30 9327 8.
24	F01220011	DADO M 6X 1 D980 8 ZN	SELF LOCKING NUT M6	ECROU AUTOBL. M6	SELBSTSPERR.MUTTER M6	DADO AUTOBL. M6
25	G07002218	ANTI INTASAMENTO M	ANTI CLOGGING M	ANTI BOURRAGE SOC	VERSTOPFUNGSHEMMENDES ELEMENT	ANTI OBSTRUCCIN M A
26	F01020039	VITE M 6X 1X 35 U5737 8.8 ZN	BOLT 6 X35 5737 8.G GALVANIZED	VIS 6 X35 5737 8.G ZN	SCHRAUBE 6 X35 5737 8.G ZN	TORNILLO 6 X35 5737 8.G ZN
27	F01270010	DADO M10 17X8 D557 ZN	NUT M10 17X8 D557 ZG	ECROU M10 17X8 D557 Z	MUTTER M10 17X8 D557	TUERCA M10 17X8 D557
28	G16243760	FALCIONE SCARPETTA FS1	CUTTER	HACHOIR	SAASCHAR	HOJA DE CORTE
29	G16043230	TIRANTE L.410				
30	G16043240	TIRANTE L.560				
31	F01230048	DADO M10X 1,5 D982 8 ZN	NORM.SELF-LOCKING NUT 10 GALVA	ECROU AUTOB.NOR.10 ZN	SELBSTSP. MUTTER NOR. 10 ZN	TUERCA AUTOB. NOR. 10 ZN
32	G16043150	ASS.SUPPORTO 3 RANGHI				
33	F20110715	CAV.Q.M10X 1,5X 30 61X 80 ZN				
34	G16243770	SCARPA SEMINA A FASCIA	BANDS CUTTER	HACHOIR BANDES	SZSCHAR BANDEL	GUA¥ADORA FAJA
35	F01020445	VIT.M 8X1,25X 30 U5739 8.8 ZN	BOLT M 8X30	VIS M 8X30	SCHRAUBE M 8X30	TORNILLO M 8X30
36	F01420048	ROS.M8 8,4X 24X 2 U6593 ZN	PLANE WASHER D.8	RONDELLE D.8	SCHEIBE D.8	ARANDELA D.8
37	G16249010	SUPPORTO SX PATTINO LIMITATORE				
38	G16248980	ASS.PATTINO LIMITATORE				
39	G16249000	SUPPORTO DX PATTINO LIMITATORE				
40	F01220022	DADO M 8X1,25 D980 8 ZN	SELF LOCKING NUT M8X1,25 980V	ECROU AUTOBL. M8X1,25 980-V	SELBSTSP.MUTT. M8X1,25 980-V	DADO AUTOBL. M8X1,25 980-V

TAV. 171

Versione SEME / SEED version

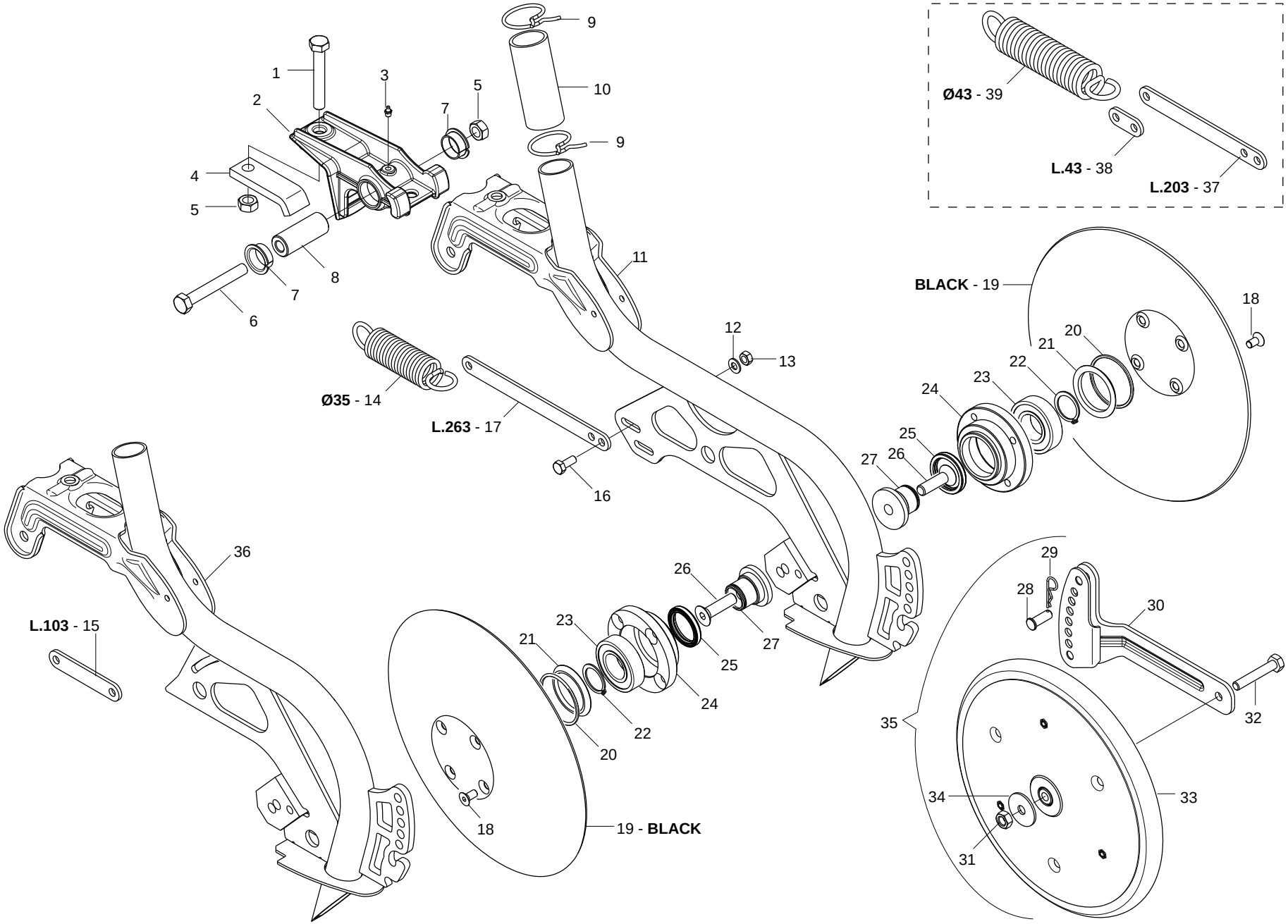

GASPARDO

ASSOLCATORI A DISCO

TAV. 171

Pos.	Cod.	Descrizione	Description	Description	Benennung	Descripcion
1	F01020166	VITE M12X1,75X80 U5737 8.8 ZN	BOLT 12X80 5737 8.G GALVANIZED	VIS 12X80 5737 8.G ZN	SCHRAUBE 12X80 5737 8.G ZN	TORNILLO 12X80 5737 8.G ZN
2	G16340801	SUPPORTO SCARPETTA				
3	F01100011	ING.M 6X1 7663-A 9SMNPB28 ZN	SPHERE NIPPLE M6X1/A	GRAISSEUR A BILLES M6X1/A	KUGELFETTBsCHSE M6X1/A	ENGRAS. DE ESFERAS M6X1/A
4	G16340810	SCONTRO DI FISSAGGIO	FIXING STRIKER PLATE	BUTEE DE FIXATION	BEFESTIGUNGSANSCHLAG	ELEM. DE EMPALME DE SUJECION
5	F01220048	DADO M12X1,75 D980 8 ZN	SELF LOCKING NUT M12X1,75 980V	ECROU AUTOBL. M12X1,75 980-V	SIEHE 00553312	DADO AUTOBL. M12X1,75 980-V
6	F01020168	VITE M12X1,75X90 U5737 8.8 ZN	BOLT 12X90 5737 8.G GALVANIZED	VIS 12X90 5737 8.G ZN	SCHRAUBE 12X90 5737 8.G ZN	TORNILLO 12X90 5737 8.G ZN
7	F04150034	CUSCINETTO FLANGIATO 25X28X16				
8	G18802740	BOCCOLA 25X12X63,5	BUSHING 25X12X63,5	BOITE 25X12X63,5	BUCHSE 25X12X63,5	CASQUILLO 25X12X63,5
9	G65336001	MOLLA SPEC.ZN STRING.CONC. SP	SPEC SPRING ZN MAN. PIPE CLAMP	RESSORT SPEC. ZN SERRE-TUBE LO	SPEZIALFEDER ZN DsNGERSCHELLE.	MUELLE ESPEC. ZN APLASTA ABONO
10	G19005340	MANICOTTO DI GIUNZIONE	JOINT SLEEVE	MANCHON DE RACCORD	VERBINDUNGSMUFFE	MANGUITO DE UNIN
11	G16244111	TUBO DISCO COREX BASSO P				
12	F01410051	ROS.M8 8,4X 17X1,6 U6592 ZN	PLANE WASHER D.8	RONDELLE D.8	SCHEIBE D.8	ARANDELA D.8
13	F01220022	DADO M 8X1,25 D980 8 ZN	SELF LOCKING NUT M8X1,25 980V	ECROU AUTOBL. M8X1,25 980-V	SELBSTSP.MUTT. M8X1,25 980-V	DADO AUTOBL. M8X1,25 980-V
14	G18904350	MOLLA TENSIONAM.ELEM.CORTO ZN	DRILL COULTER TENS. SPRING	RESSORT TENDEUR SOC	EDER SZSCHARSPANNUNG	UELLE TENSIN SURCADOR
15	G16042500	TIRANTE L.103				
16	F01020436	VITE M 8X1,25X 20 U5739 8.8 ZN	BOLT M 8X20	VIS M 8X20	SCHRAUBE M 8X20	TORNILLO M 8X20
17	G16042510	TIRANTE L.263				
18	F01030054	VITE M 8X1,25X16 U5933 10.9 ZD	BOLT 8X16 UNI5933 10.9 GALVANI	VIS 8X16 UNI 5933 10.9 ZN	SCHRAUBE 8X16 UNI 5933 10.9 ZN	TORNILLO 8X16 UNI 5933 10.9 ZN
19	G16043090	DISCO COREX FE-B SP.2,5	DISC COREX FE-B SP.2,5			
20	F03011144	GUARNIZIONE OR 3 X 56	O-RING GASKET 3 X 56	JOINT TORIQUE 3 X 56	DICHTUNG OR 3 X 56	JUNTA OR 3 X 56
21	G16244181	ANELLO DI SOSTEGNO ZAMA				
22	F02050112	ANELLO E. DE 30X 1,5 U7435 C70	SEEGER RING 30X 1,5 U7435 C70	SEEGER E. 30 X 1,5 U7435 C70	SEEGERING E. 30X 1,5 U7435 C70	ANILLO E. 30 X 1,5 U7435 C70
23	F04010174	CUSC.D30 D62 B16 6206 2RS	BEARING 6206 2RS	PALIER 6206 2RS	LAGER 6206 2RS	COJINETE 6206 2RS
24	G16244171	MOZZO COREX ZAMA ZN				
25	F03010074	ANELLO T.A. 32X 47X 7 D3760NBR	RING 32X 47X 7 D3760NBR	BAGUE 32X 47X 7 D3760NBR	RING 32X 47X 7 D3760NBR	ANILLO 32X 47X 7 D3760NBR
26	F01030112	VITE M12X1,75X45 U5933 10.9 ZD	SCREW M12X1,75X45 U5933 10.9 Z	VIS M12X1,75X45 U5933 10.9 ZG	SCHRAUBE M12X1,75X45 U5933 10.	TORNIL. M12X1,75X45 U5933 10.9
27	G16244050	ASSE COREX ZN	AXLE COREX ZN	AXE COREX ZN	ACHSE COREX ZN	EJE COREX ZN
28	F02100336	PERNO D.10 UNI 1710 ZN	PIN D.10 UNI 1676/DIN 71752	PIVOT D.10 UNI 1676/DIN 71752	BOLZEN D.10 UNI 1676/DIN 71752	PERNO D.10 UNI 1676/DIN 71752
29	F02200342	COPIGLIA R 2X 50 ZN	SPLIT PIN R 2X50 ZN	GOUPILLE R 2X50 ZN	SPLINT R 2X50 ZN	CHAVETA R 2X50 ZN
30	G16244101	BRACCIO RUOTA LIMIT.PROF.				
31	F01220033	DADO M10X 1,5 D980 8 ZN	NUT M10X 1,5 D980 8 ZB	ECRO.M10X 1,5 D980 8 ZB	MUTT.M10X 1,5 D980 8 ZB	TUER.M10X 1,5 D980 8 ZB
32	F01020120	VIT.M10X 1,5X 65 U5737 8.8 ZN	BOLT M 10X65	VIS M 10X65	SCHRAUBE M 10X65	TORNILLO M 10X65
33	G16244070	RUOTA LIMITAT.PROF.COMPL.1"X12	LIMITER DEPTH COUPLYNG	LIMITEUR DE PROFONDEU	TIEFENBEGRENZERKOMPLEX	LIMITADOR DE PROFUNDIDAD
34	F01420061	ROS.M10 10,5X 40X2,5 U6593 ZN	WASHER 11X40X2.5 6593 ZN	RONDELLE 11X40X2,5 6593 ZN	UNTERLEGSCHEIBE 11X40X2,5 6593	ARANDELA 11X40X2,5 6593 ZN
35	G16244121	RUOTA LIMIT.PROF. 1"X12				
36	G16042531	TUBO COREX CORTO P				
37	G16340840	PIATTO TIRO MOLLA INTERMEDIO	PLATE INTERMED.	PLATEAU INTERMED.	TELLER MITTLERES	PLATO INTERMEDIO
38	G16340860	PIATTO TIRO MOLLA CORTO	PLATE SHORT	PLATEAU COURT	TELLER KURZES	PLATO CORTO
39	G18904360	MOLLA TENSIONAM.ELEM.LUNGO	SPRING	RESSORT	FEDER	MUELLE

TAV. 180

Versione SEME / SEED version

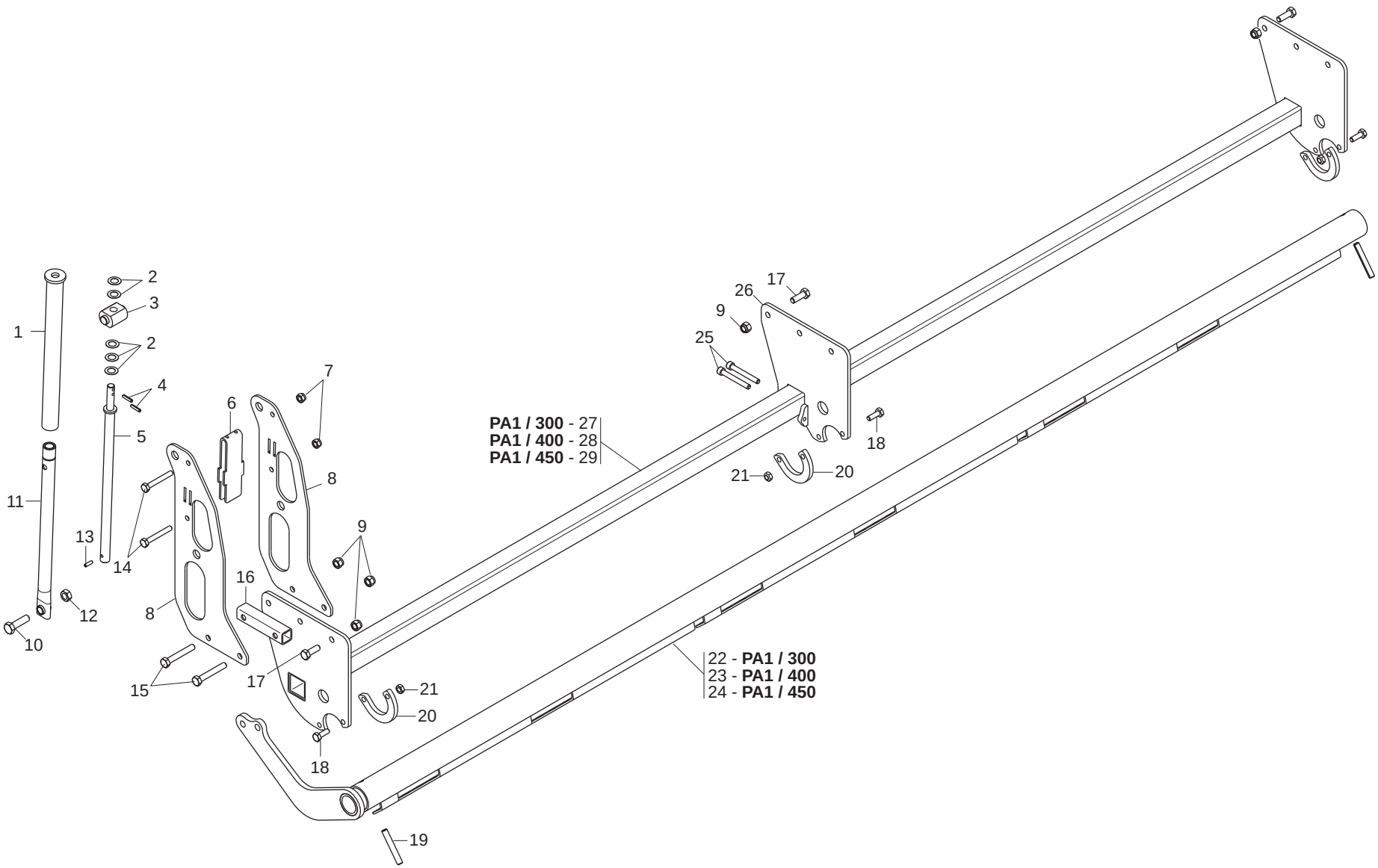

GASPARDO

PRESSIONE ASSOLCATORI

TAV. 180

Pos.	Cod.	Descrizione	Description	Description	Benennung	Descripcion
1	G16042700	PROTEZIONE VITE DI REGOLAZIONE				
2	G22220073	RONDELLA 28X0,3X16,5	WASHER 28X0-3X16-5	RONDELLE 28X0-3X16-5	UNTERLEGSCHEIBE 28X0-3X16-5	ARANDELA 28X0-3X16-5
3	G16042690	ATTACCO VITE REGOLAZIONE ZN				
4	F02100110	SPINA E.P. 6X 26 U6873 C70 BR	PIN EL. 6 X26 DIN 1481	FICHE EL.6 X26 DIN 1481	SPANNSTIFT 6 X26 DIN 1481	CLAVIJA EL.6 X26 DIN 1481
5	G16042750	BARRA FILETTATA ZN				
6	G16042420	RINFORZO				
7	F01230048	DADO M10X 1,5 D982 8 ZN	NORM.SELF-LOCKING NUT 10 GALVA	ECROU AUTOB.NOR.10 ZN	SELBSTSP. MUTTER NOR. 10 ZN	TUERCA AUTOB. NOR. 10 ZN
8	G16042460	SUPPORTO REGOLAZIONE				
9	F01230059	DADO M12X1,75 D982 8 ZN	NUT M12X1,75 D982 8 ZB	ECRO.M12X1,75 D982 8 ZB	MUTT.M12X1,75 D982 8 ZB	TUER.M12X1,75 D982 8 ZB
10	F01020547	VITE M14X 2X50 U5739 8.8 ZN	BOLT M14X2X50	VIS M14X2X50	SCHRAUBE M14X2X50	TORNILLO M14X2X50
11	G16042720	PROLUNGA				
12	F01220255	DADO M14X 2 D980 8 ZN	NUT- TRISTOP M14	ECROU TRISTOP M14	MUTTER TRISTOP M14	TUERCA TRISTOP M14
13	F02100106	SPINA E.P. 6X 20 U6873 C70 BR	PIN 6X 20	GOUJON 6X 20	BOLZEN 6X 20	ESPINA 6X 20
14	F01020125	VITE M10X 1,5X75 U5737 8.8 ZN	BOLT 10X75 5737 8.G GALVANIZED	VIS 10X75 5737 8.G ZN	SCHRAUBE 10X75 5737 8.G ZN	TORNILLO 10X75 5737 8.G ZN
15	F01020166	VITE M12X1,75X80 U5737 8.8 ZN	BOLT 12X80 5737 8.G GALVANIZED	VIS 12X80 5737 8.G ZN	SCHRAUBE 12X80 5737 8.G ZN	TORNILLO 12X80 5737 8.G ZN
16	G16042470	TUBO Q.30X3X135 2FORI D.13				
17	F01020512	VITE M12X1,75X35 U5739 8.8 ZN	SCREW M 12X35	VIS M 12X35	SCHRAUBE M 12X35	TORNILLO M 12X35
18	F01020476	VITE M10X 1,5X30 U5739 8.8 ZN	BOLT M 10X30	VIS M 10X30	SCHRAUBE M 10X30	TORNILLO M 10X30
19	F02100181	SPINA E.P. 12X 80 U6873 C70 BR	PIN EL. 12X80 DIN 1481	FICHE EL. 12X80 DIN 1481	SPANNSTIFT 12X80 DIN 1481	CLAVIJA EL.12X80 DIN 1481
20	G16312530	ANELLO CHIUSURA INFERIORE ZN	RING	BAGUE	RING	ANILLO
21	F01220033	DADO M10X 1,5 D980 8 ZN	NUT M10X 1,5 D980 8 ZB	ECRO.M10X 1,5 D980 8 ZB	MUTT.M10X 1,5 D980 8 ZB	TUER.M10X 1,5 D980 8 ZB
22	G16042630	TUBO TENDITORE 3000				
23	G16042650	TUBO TENDITORE 4000				
24	G16042810	TUBO TENSIONE MOLLE 450				
25	F01040129	VITE M10X 1,5X80 U5931 8.8 ZN	SCREW M10X 1,5X 80 U5931 8.8 Z	VIS M10X 1,5X 80 U5931 8.8 ZG	SCHRAUBE M10X 1,5X 80 U5931 8.	TORNIL. M10X 1,5X 80 U5931 8.8
26	G16042660	SUPPORTO CENTRALE				
27	G16042390	BARRA AGGANCIO EL.OPERATORI300				
28	G16042590	BARRA AGGANCIO EL.OPERATORI400				
29	G16042790	BARRA AGGANCIO ELEMENTI450				

TAV. 190

Versione SEME / SEED version

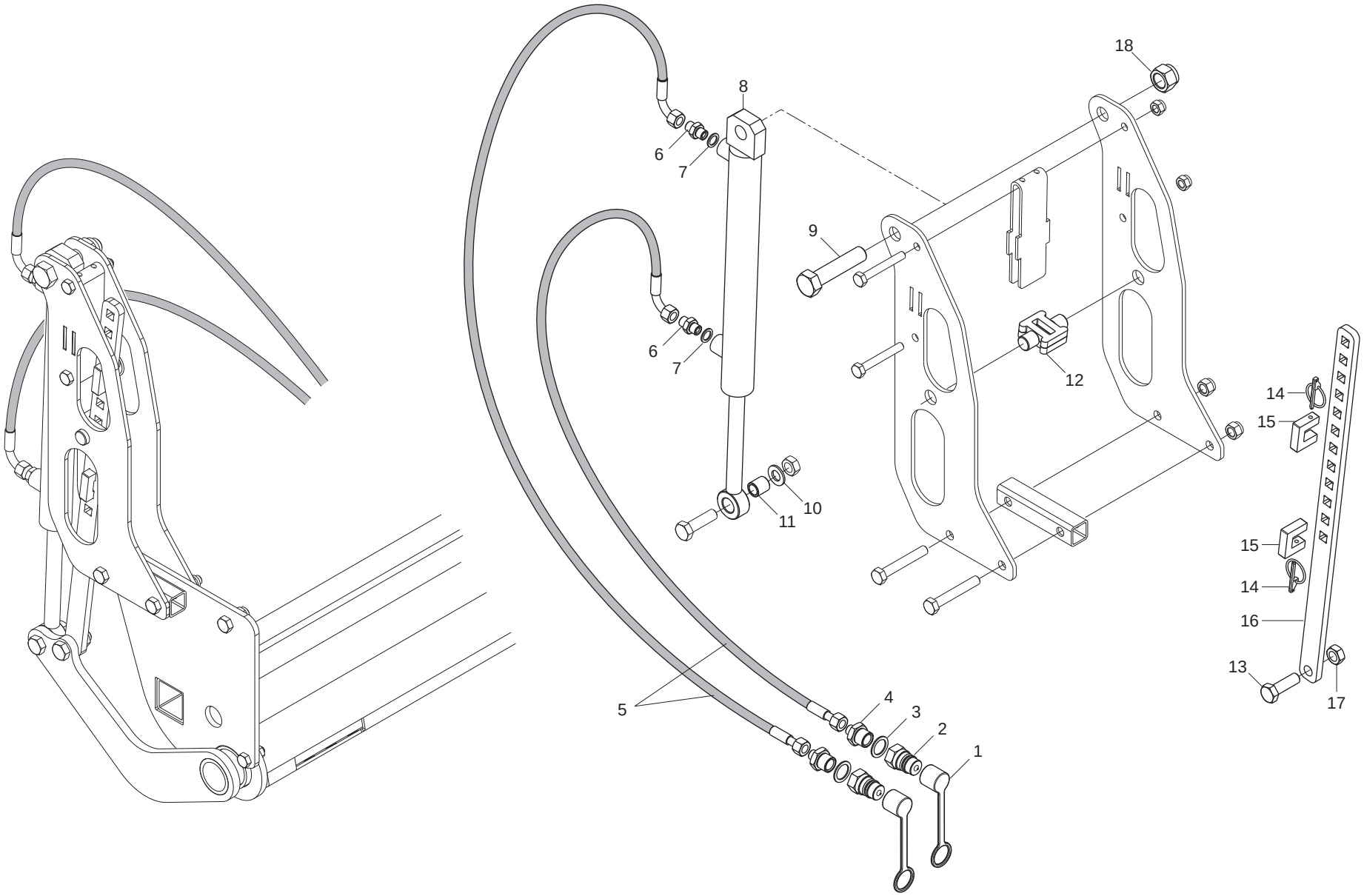

IMPIANTO OLEODINAMICO PRESSIONE ASSOLCATORI

TAV. 190

Pos.	Cod.	Descrizione	Description	Description	Benennung	Descripcion
1	F05150325	CAPPUCCIO PROT.INNESTO RAP.1/2	COVER 1/2	COUVERCLE 1/2	DECKEL 1/2	TAPA 1/2
2	F03150935	INNESTO RAP.MASCH.1/2 A VALV.	QUICK CONNECT MALE CONE 1/2 CO	CONNEXION RAPIDE MALE CONE 1/2	SCHNELLKUPPLUNG GEWINDE KONISC	ACOPLAMIENTO RAPIDO MACHO CONO
3	F03151237	RONDELLA RAME 21X27X1,5 -1/2"	1/2 COPPER WASHER	RONDELLE CUIVRE 1/2	UNTERLEGSCHEIBE KUPFER 1/2	ARANDELA COBRE 1/2
4	F03150211	NIPPLO MM CIL-CIL 1/2-1/4 ZN	NIPLE 1/4-1/2	NIPLE 1/4-1/2	NIPLE 1/4-1/2	NIPLE 1/4-1/2
5	G15210561	TUBO 1/4R2 CF1/4- F1/4 3500				
6	F03150266	NIPPLO MM CIL-CIL 1/4-1/4 ZN	NIPPLE GALV.CYL.MALE 1/4 ZN	NIPPLE MALE CYL. 1/4 ZN	NIPPELZYL.1/4 ZN	NIPLE MACHO CIL.1/4 ZN
7	F03151238	RONDELLA RAME 13X19X1,5 -1/4"	1/4 COPPER WASHER	RONDELLE CUIVRE 1/4	UNTERLEGSCHEIBE KUPFER 1/4	ARANDELA COBRE 1/4
8	G16012962	CILINDRO DE 32X20 -275	CYLINDER D.E. 32X20 -275	CYLINDRE D.E. 32X20 -275	ZYLINDER D.E. 32X20 -275	CILINDRO D.E. 32X20 -275
9	F01020325	VITE M20X2,5X 90 U5737 10.9 ZD	BOLT 20X90 5737 10.9G GALVANI	VIS 20X90 5737 10.9G ZN	SCHRAUBE 20X90 5737 10.9G ZN	TORNILLO 20X90 5737 10.9G ZN
10	F01410088	ROS.M14 15X 28X2,5 U6592 ZN	WAS.M14 15X 28X2,5 U6592 ZB	RON.M14 15X 28X2,5 U6592 ZB	SCH.M14 15X 28X2,5 U6592 ZB	ARA.M14 15X 28X2,5 U6592 ZB
11	G18803120	BOCCOLA 20X14,25X21 ZN				
12	G16042430	GUIDALAMA				
13	F01020198	VITE M14X 2X 45 U5737 8.8 ZN	BOLT 14X45 5737 8.G GALVANIZ.	VIS 14X45 5737 8.G ZN *	SCHRAUBE 14X45 5737 8.G ZN *	TORNILLO 14X45 5737 8.G ZN *
14	F02200452	SPINA SCATTO D.4,4 B/80 ZN	SNAP PIN D.4-4 B/80	FICHE A DETENTE D. 4-4 B/80	EINRASTSTIFT D 4-4 B/80	CLAVIJA DE MUELLE D.4-4 B/80
15	G16042490	FERMO ZN				
16	G16042410	ASTA REGOLAZIONE				
17	F01220255	DADO M14X 2 D980 8 ZN	NUT- TRISTOP M14	ECROU TRISTOP M14	MUTTER TRISTOP M14	TUERCA TRISTOP M14
18	F01230131	DADO M20X 2,5 D982 6 ZN	NUT M20X 2,5 D982 6 ZB	ECRO.M20X 2,5 D982 6 ZB	MUTT.M20X 2,5 D982 6 ZB	TUER.M20X 2,5 D982 6 ZB

TAV. 200

Versione SEME / SEED version

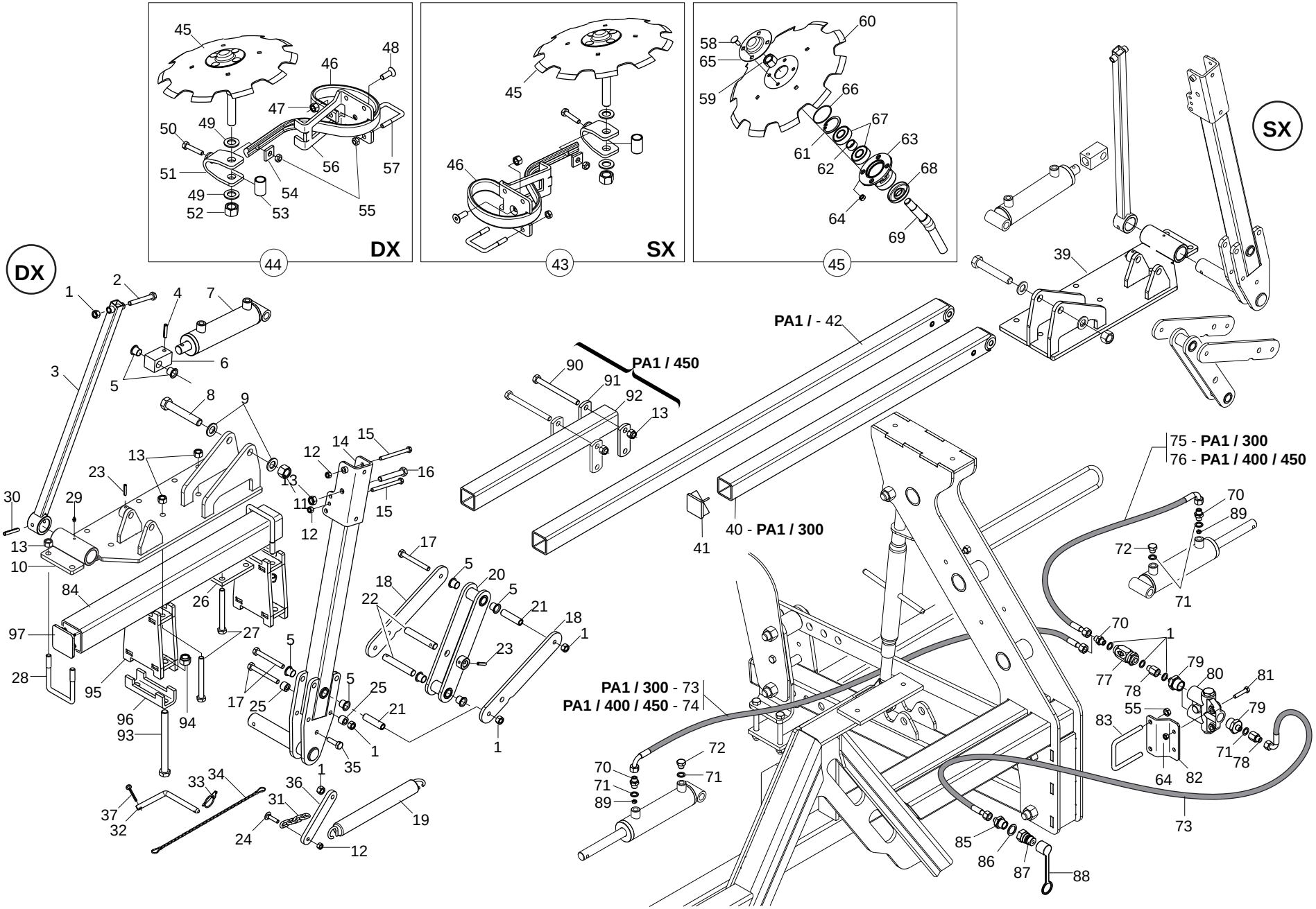

GASPARDO

SEGNAFILE

TAV. 200

Pos.	Cod.	Descrizione	Description	Description	Benennung	Descripcion
1	F01230048	DADO M10X 1,5 D982 8 ZN	NORM.SELF-LOCKING NUT 10 GALVA	ECROU AUTOB.NOR.10 ZN	SELBSTSP. MUTTER NOR. 10 ZN	TUERCA AUTOB. NOR. 10 ZN
2	F01020128	VITE M10X 1,5X80 U5737 8.8 ZN				
3	G16072150	RINFORZO SEGNAFILE	ROW MARKER REINFORCEMENT	RENFORCEMENT TRACEUR	VERSTZRKUNG REIHENANREIS	REFUERZO MARCADOR DE FILAS
4	F02100141	SPINA E.P. 8X 36 U6873 C70 BR	PIN EL. 8 X36 DIN 1481	FICHE EL. 8 X36 DIN 1481	SPANNSTIFT 8 X36 DIN 1481	CLAVIJA EL.8 X36 DIN 1481
5	F04150013	BOCCOLA BK1 16X170 F	BUSHING BK1 16X170 F	BOITE BK1 16X170 F	BÜCHSE BK1 16X170 F	CASQUILLO BK1 16X170 F
6	G16072040	ATTACCO STELO CILINDRO ZN.	CYLINDER COUPLING	FIXATION CYLINDRE	KUPPLUNG ZYLINDER	UNIN CILINDRO
7	G16072360	CILINDRO SEGNAFILE ALIANTE	ROW MARKER CYLINDER	CYLINDRE TRACEUR	SYLINDER REIHENANREISSER	CILINDRO MARCADOR DE FILAS
8	F01010157	VITE M18X1,5X110 U5738 8.8 ZN	BOLT M 18X1,5X110	VIS M 18X1,5X110	SCHRAUBE M 18X1,5X110	TORNILLO M 18X1,5X110
9	F01410112	ROS.M18 19X 34X 3 U6592 ZN	PLANE WASHER D.18	RONDELLE D.18	SCHEIBE D.18	ARANDELA D.18
10	G16072200	SUPPORTO SEGNAFILE DX	RIGHT ROW MARKER SUPPORT	SUPPORT TRACEUR DRT	HALTERUNG REIHENANREISSER RE	HALTERUNG REIHENANREISSER RE
11	F01230096	DADO M18X 1,5 D982 8 ZN	NUT M18X 1,5 D982 ZB	ECROU M18X 1,5 D982 ZB	MUTTER M18X 1,5 D982 ZB	TUERCA M18X 1,5 D982 ZB
12	F01230034	DADO M 8X1,25 D982 8	SELF LOCKING NUT M8X1,25	ECROU AUTOBL. M8X1,25	SELBSTSP.MUTT. M8X1,25	DADO AUTOBL. M8X1,25
13	F01230059	DADO M12X1,75 D982 8 ZN	NUT M12X1,75 D982 8 ZB	ECRO.M12X1,75 D982 8 ZB	MUTT.M12X1,75 D982 8 ZB	TUER.M12X1,75 D982 8 ZB
14	G16072110	BRACCIO SEGNAFILE	ROW MARKER ARM	BRAS TRACEUR	REIHENANREISSARM	BRAZO MARCADOR DE FILAS
15	F01020090	VITE M8X1,25X100 U5737 8.8 ZN	BOLT 8 X100 5737 8.G GALVANIZ.	VIS 8 X100 5737 8.G ZN	SCHRAUBE 8 X100 5737 8.G ZN	TORNILLO 8 X100 5737 8.G ZN
16	F01020168	VITE M12X1,75X90 U5737 8.8 ZN	BOLT 12X90 5737 8.G GALVANIZED	VIS 12X90 5737 8.G ZN	SCHRAUBE 12X90 5737 8.G ZN	TORNILLO 12X90 5737 8.G ZN
17	F01020130	VITE M10X 1,5X90 U5737 8.8 ZN	BOLT M 10X90	VIS M 10X90	SCHRAUBE M 10X90	TORNILLO M 10X90
18	G16072000	LAMA 300 X50 X8	BLADE 300 X50 X8	LAME 300 X50 X8	MESSER 300 X50 X8	CUCHILLA 300 X50 X8
19	G65337004	MOLLA TRAZ.SOLLEV. FU	TRACTION SPRING LIFT. FU	RESSORT TRACT. LEVAGE FU	ZUGFEDER HEBUNG FU	MUELLE TRAC. LEVDEL. FU
20	G16072010	LEVA SOLLEVAMENTO SEGNAFILE	LIFTING LEVER	LEVIER LEVAGE	HEBEL HEBUNG	PALANCA LEVANTAMIENTO
21	G18801892	BOCCOLA 10X16X60,2	BUSHING 10X16X60,2	BOITE 10X16X60,2	BUECHSE 10X16X60,2	CASQUILLO 10X16X60,2
22	G16072190	PERNO D.16 X100 ZN.	GALVANIZED PIN D.16 X100	PIVOT D.16 X100 ZN.	ZAPFEN D.16 X100 ZN.	PERNO D.16 X100 ZN.
23	F02100114	SPINA E.P. 6X 30 U6873 C70 BR	ELASTIC PIN 6X30	GOUJON ELASTIQUE 6X30	SPANNHUELSE 6X30	ESPINA ELASTICA 6X30
24	F01060041	BUL.M 8X1,25X 25 U5732 4.6 ZN	BOLT 8 X25 5732 4.6 GALVANIZED	VIS 8 X25 5732 4.6 ZN	SCHRAUBE 8 X25 5732 4.6 ZN	TORNILLO 8 X25 5732 4.6 ZN
25	G18801850	BOCCOLA 10,25X20X15 ZN	BUSHING 10,25X20X15 ZN	BOITE 10,25X20X15 ZN	BUCHSE 10,25X20X15 ZN	CASQUILLO 10,25X20X15 ZN
26	G16010170	SCONTRO 4 FORI	STRIKER PLATE 4 HOLES	BUTEE 4 TROUS	ANSCHLAG 4 LTCHER	ELEM. DE EMPALME 4 ORIFICIOS
27	F01020174	VITE M12X1,75X120 5737 8.8 ZN	BOLT 12X120 5737 8.8 GALVANIZ.	VIS 12X120 5737 8.8 ZN	SCHRAUBE 12X120 5737 8.8 ZN	TORNILLO 12X120 5737 8.8 ZN
28	F20110745	CAV.Q.M12X1,75X 35 83X 96 ZN	U-BOLT M12 X PIPE 70X70	CAVALIER M12 POUR TUBE 70X70	BsGELBOLZEN M12 FsR ROHR 70X70	PERNO EN U M12 X TUBO 70X70
29	F01100011	ING.M 6X1 7663-A 9SMNPB28 ZN	SPHERE NIPPLE M6X1/A	GRAISSEUR A BILLES M6X1/A	KUGELFETTBsCHSE M6X1/A	ENGRAS. DE ESFERAS M6X1/A
30	F02100144	SPINA E.P. 8X 50 U6873 C70 BR	ELASTIC PIN 8X50 1481	GOUJON ELASTIQUE 8X50 1481	SPANNHUELSE 8X50 1481	ESPINA ELASTICA 8X50 1481
31	G16041430	CATENA GENOVESE D.5 L.102 ZN.	GENOAN CHAIN D.5 L.102 ZN	CHAINE GENOISE D.5 L.102 ZN	KETTE GENOVESE D.5 L.102 ZN	CADENA GENOVESA D.5 L.102 ZN
32	G14212010	CHIAVISTELLO PUNTELLO PIEGH.ZN				
33	F02200452	SPINA SCATTO D.4,4 B/80 ZN	SNAP PIN D.4-4 B/80	FICHE A DETENTE D. 4-4 B/80	EINRASTSTIFT D 4-4 B/80	CLAVIJA DE MUELLE D.4-4 B/80
34	G13812311	CATENELLA CON MOSCHETTONE	CHAIN WITH SPRING CATCH	CHAINETTE AVEC MOUSQUETON	KETTE MIT KARABINERHAKEN	CADENA CON GANCHO
35	F01020479	VITE M10X 1,5X35 U5739 8.8 ZN	BOLT M 10X35	VIS M 10X35	SCHRAUBE M 10X35	TORNILLO M 10X35
36	G16072030	ASTA TENDI MOLLA	SPRING TENSION ROD	TIGE TENSION. RESSORT	STANGE FEDERSPANNUNG	VARILLA TENSIN MUELLE
37	F02200227	COPIGLIA 5X 30 U1336 ZN	SPLIT PIN 5 X30 1336 GALVAN.	GOUPILLE 5 X30 1336 ZN	SPLINT 5 X30 1336 ZN	PASADOR 5 X30 1336 ZN
38	F01020172	VITE M12X1,75X110 5737 8.8 ZN	BOLT 12X110 5737 8.G GALVANIZ.	VIS 12X110 5737 8.G ZN	SCHRAUBE 12X110 5737 8.G ZN	TORNILLO 12X110 5737 8.G ZN
39	G16072050	SUPPORTO SEGNAFILE SX	LEFT ROW MARKER SUPPORT	SUPPORT TRACEUR GCH	HALTERUNG REIHENANREISSER LI	SOPORTE MARCADOR DE FILAS IZQ
40	G16912250	BRACCIO SEGNAFILE	ROW MARKER ARM	BRAS TRACEUR	SPURREISSERARM	BRAZO MARCADOR SURCOS
41	F20120349	PUNTALE Q.50 ALETT.POLIT.NERO				
42	G16072220	BRACCIO SEGNAFILE	ROW MARKER BEAM	BRAS TRACEUR	REIHENANREISSARM	BRAZO MARCADOR DE FILAS
43	G16072600	DISCO SUPPORTO A MOLLA SX COMP	ROW MARKER DISK SX COMPL.			
44	G16072570	DISCO SUPPORTO A MOLLA DX COMP	ROW MARKER DISK DX COMPL.	DISQUE TRACEUR COMPL.	SPURREISSERSCHEIBE KOMPL.	DISCO MARCADOR DE FILAS COMPL.
45	G16072560	DISCO SEGNAFILE COMPL	COMPL. ROW MARKER DISC	DISQUE TRACEUR COMPL	SPURREISSERSCHEIBE KOMPL.	DISCO MARCADOR DE SURCOS COMPL
46	F20120333	MOLLA DISCO SEGNAFILE	ROW MARKER DISC SPRING	RESSORT DISQUE TRACEUR	FEDER SPURREISSERSCHEIBE	MUELLE DISCO MARCADOR DE SURCO
47	F01230059	DADO M12X1,75 D982 8 ZN	NUT M12X1,75 D982 8 ZB	ECRO.M12X1,75 D982 8 ZB	MUTT.M12X1,75 D982 8 ZB	TUER.M12X1,75 D982 8 ZB
48	F01030109	VITE M12X1,75X35 U5933 10.9 ZD	BOLT M 12X35	VIS M 12X35	SCHRAUBE M 12X35	TORNILLO M 12X35
49	F01480254	RONDELLA D20 UNI 1751 ZN	WASHER D20 UNI 1751 ZN *	RONDELLE D20 UNI 1751 ZN *	UNTERLEGSCHEIBE D20 UNI 1751 Z	ARANDELA D20 UNI 1751 ZN *
50	F01020114	VITE M10X 1,5X50 U5737 8.8 ZN	BOLT 10X50 5737 8.G GALVANIZED	VIS 10X50 5737 8.G ZN	SCHRAUBE 10X50 5737 8.G ZN	TORNILLO 10X50 5737 8.G ZN
51	G16071060	SUPPORTO PERNO DISCO SEGNAFILE	ROWMARKER DISK PIN SUPPORT	SUPPORT PIVOT DISQUE TRACEUR	ZAPFENHALTERUNG SPURREISSERSCH	SOPORTE EJE DISCO MARCASURCOS
52	F01230131	DADO M20X 2,5 D982 6 ZN	NUT M20X 2,5 D982 6 ZB	ECRO.M20X 2,5 D982 6 ZB	MUTT.M20X 2,5 D982 6 ZB	TUER.M20X 2,5 D982 6 ZB
53	G18802220	BOCCOLA 21,7X26,9X41	BUSH 21.7X26.9X41	DOUILLE 21,7X26,9X41	BUCHSE 21,7X26,9X41	MANGUITO 21,7X26,9X41
54	G16311920	PIATTO FERMO MOLLA	SPRING LOCK PLATE	PLATEAU ARR-T RESSORT	FEDERBLOCKIERPLATTE	DISCO TOPE MUELLE

TAV. 200

Versione SEME / SEED version

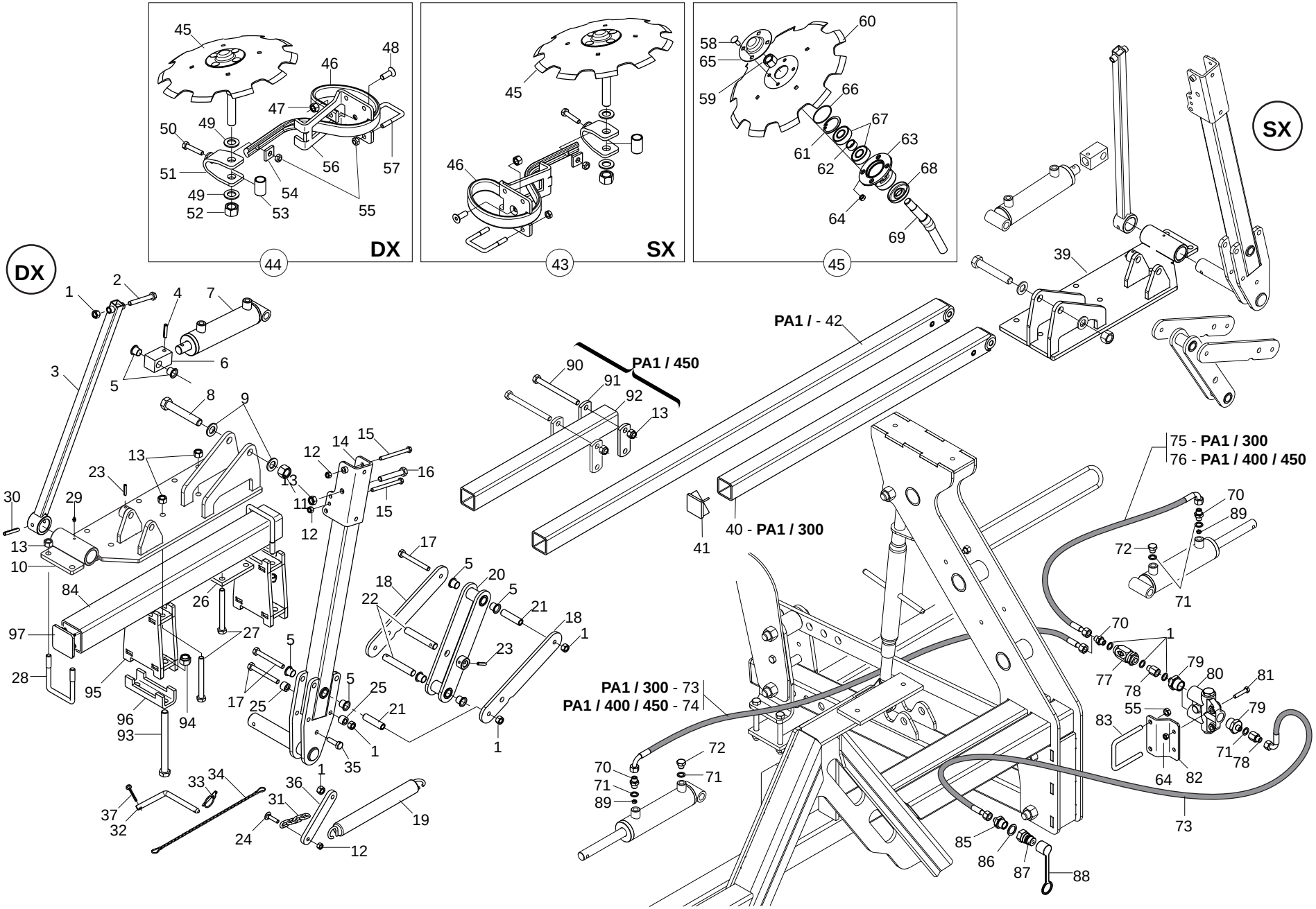

GASPARDO

SEGNAFILE

TAV. 200

Pos.	Cod.	Descrizione	Description	Description	Benennung	Descripcion
55	F01220033	DADO M10X 1,5 D980 8 ZN	NUT M10X 1,5 D980 8 ZB	ECRO.M10X 1,5 D980 8 ZB	MUTT.M10X 1,5 D980 8 ZB	TUER.M10X 1,5 D980 8 ZB
56	G16311850	SUPPORTO MOLLA MC	SPRING SUPPORT MC	SUPPORT RESSORT MC	FEDERHALTERUNG MC	SOPORTE MUELLE MC
57	F20110715	CAV.Q.M10X 1,5X 30 61X 80 ZN				
58	F01060040	BUL.M 8X1,25X 20 U5732 4.6 ZG	BOLT 8 X20 5732 4.6 GALVANIZED	VIS 8 X20 5732 4.6 ZN	SCHRAUBE 8 X20 5732 4.6 ZN	TORNILLO 8 X20 5732 4.6 ZN
59	F01230098	DADO M18X 2,5 D982 8 ZN	NUT M18X 2,5 D982 8 ZB	ECRO.M18X 2,5 D982 8 ZB	MUTT.M18X 2,5 D982 8 ZB	TUER.M18X 2,5 D982 8 ZB
60	G16072590	DISCO SEGNAFILE D.350	ROW MARKER DISK D.350	DISQUE TRACEUR D350	SPURREISSERSCHEIBE D. 350	DISCO MARCARDOR DE FILAS O 350
61	F02050370	ANELLO E. DI 47X1,75 U7437 C70	SEEGER RING 47X 1,75 U7437 C70	SEEGER E. 47X 1,75 U7437 C70	SEEGERING E. 47X1,75 U7437 C70	ANILLO E. 47X 1,75 U7437 C70
62	G18801270	BOCCOLA 21 X25 X12 ZN	BUSHING 21 X 25 X 12 ZN	BOITE 21 X25 X12 ZN	BsCHSE 21 X25 X12 ZN	CASQUILLO 21 X25 X12 ZN
63	G16610160	SUPP.CUSCINETTI DISCO SEGN.ZN.	GALVAN. ROWMAKER DISK BEARING	SUPPORT ROULEMENTS DISQUE TRAC	SCHEIBENLAGERHALTERUNG	SOPORTE COJINETE DE DISCO MARC
64	F01200244	DADO M 8X1,25 U5588 6.8 ZN	NUT M8	ECROU M8	MUTTER M8	DADO M8
65	G16610190	CHIUSURA CUSCINETTO ZN	GALVAN. BEARING CLOSURE	FERMETURE ROULEMENT ZN	LAGERVERSCHLUSS ZN	CIERRE COJINETE ZN
66	F03010576	ANELLO OR 50,52X1,78 NBR	GASKET OR 033 DOWTY	BAGUE OR 033 DOWTY	RING OR 033 DOWTY	ANILLO OR 033 DOWTY
67	F04010156	CUSC.d20 D47 B14 6204 2RSH				
68	G16610430	FONDELLO ZN.				
69	G16072550	ASSE DISCO SEGNAFILE ZN	DISK SPINDLE	AXE DISQUE	SCHEIBENACHSE	EJE DISCO
70	F03150266	NIPPLO MM CIL-CIL 1/4-1/4 ZN	NIPPLE GALV.CYL.MALE 1/4 ZN	NIPPLE MALE CYL. 1/4 ZN	NIPPELZYL.1/4 ZN	NIPLE MACHO CIL.1/4 ZN
71	F03151238	RONDELLA RAME 13X19X1,5 -1/4"	1/4 COPPER WASHER	RONDELLE CUIVRE 1/4	UNTERLEGSCHEIBE KUPFER 1/4	ARANDELA COBRE 1/4
72	F03150717	TAPPO 1/4 GAS ZN	PLUG 1/4	BOUCHON 1/4	PFROPFEN 1/4	TAPN 1/4
73	G15210553	TUBO 1/4R2 CF45 1/4-F 1/4 2750				
74	G15210561	TUBO 1/4R2 CF1/4- F1/4 3500				
75	G16011680	TUBO 1/4' R2 C-F 1/4' L.900	PIPE 1/4'R2 C-F 1/4'L.900	TUBE 1/4'R2 C-F 1/4'L. 900	ROHR 1/4'R2 C-F 1/4'L 900	TUBO 1/4'R2 C-F 1/4'L.900
76	G15310732	TUBO 1/4R2 CF45 1/4-F 1/4 1500				
77	F03151226	REGOL.DI FLUSSO VRF 1/4' GAS	1/4' GAS VALVE VRF	SOUPAPE REG DEBIT VRF 1/4" GAZ	VENITL VRF 1/4' GAS	VæLVULA VRF 1/4' GAS
78	F03151194	PROLUNGA CORTA 036 1/4	SHORT EXTENSION 036 1/4	RALLONGE COURTE 036 1/4	KURZE VERLZNGERUNG 036 1/4	PROLONG. CORTA 036 1/4
79	F03150122	NIPPLO MM 3/4 JIC OR 1/4 OR ZG	NIPPLE- 3/4 JIC OR - 1/4	NIPPLE 3/4 JIC OR - 1/4	NIPPEL 3/4 JIC OR - 1/4	NIPLE 3/4 JIC OR - 1/4
80	F03150577	VALVOLA SEGNAF.CROSS SQV	ROW MARKER VALVE ATI C128513			
81	F01020068	VITE M 8X1,25X40 U5737 8.8 ZN				
82	G16015380	SUPPORTO VALVOLA	VALVE SUPPORT	SUPPORT VANNE	VENTILHALTERUNG	SOPORTE V-LVULA
83	F20110725	CAV.Q.M10X 1,5X 30 81X 92 ZN	ROW MARKER SUPPORT M10 U-BOLT	CAVALIER M10SUPPORT TRACEUR	BsGELBOLZEN M10 SPURREISSERHAL	PERNO EN U M10 SOPORTE MARCA.
84	G16072350	TUBO Q. 70X 5X 700	SQUARE PIPE 70x70 X5 X700	TUBE CARRE 70x70 X5 X700	VIERKANTROHR 70x70 X5 X700	TUBO CUADRADO 70x70 X5 X700
85	F03150211	NIPPLO MM CIL-CIL 1/2-1/4 ZN	NIPLE 1/4-1/2	NIPLE 1/4-1/2	NIPLE 1/4-1/2	NIPLE 1/4-1/2
86	F03151237	RONDELLA RAME 21X27X1,5 -1/2"	1/2 COPPER WASHER	RONDELLE CUIVRE 1/2	UNTERLEGSCHEIBE KUPFER 1/2	ARANDELA COBRE 1/2
87	F03150935	INNESTO RAP.MASCH.1/2 A VALV.	QUICK CONNECT MALE CONE 1/2 CO	CONNEXION RAPIDE MALE CONE 1/2	SCHNELLKUPPLUNG GEWINDE KONISC	ACOPLAMIENTO RAPIDO MACHO CONO
88	F05150325	CAPPUCCIO PROT.INNESTO RAP.1/2	COVER 1/2	COUVERCLE 1/2	DECKEL 1/2	TAPA 1/2
89	G15413050	STROZZATORE A PASTIGLIA D.0,8	PAD VENTURI D.0,8	ETRANGLEUR D.0,8	DROSSEL D.0,8	ESTRANGULADOR D.0,8
90	F01020177	VITE M12X1,75X140 5737 8.8 ZN	BOLT M12X1,75X140 U5737 8.8 ZG	VIS M12X1,75X140 U5737 8.8 ZG	SCHRAUBE M12X1,75X140 U5737 8.	TORNIL. M12X1,75X140 U5737 8.8
91	G22280042	SCONTRO ATTACCO DISCO ID	STRIKER PLATEDISK ATT. ID	BUTEE FIXATION DISQUE ID	SCHEIBENKUPPLUNGS-ANSCHLAG ID	ELEMENTO DE EMPALME CONEXIN DC
92	G17916130	TUBO Q. 50X 4X 500				
93	F01020279	VITE M16X 2X190 U5737 10.9 ZD				
94	F01230085	DADO M16X 2 D982 8 ZN	NUT M16X 2 D982 8 ZB	ECROU M16X 2 D982 8 ZB	MUTT.M16X 2 D982 8 ZB	TUER.M16X 2 D982 8 ZB
95	G16072310	SUPPORTO SEGNAFILE	ROW MARKER SUPPORT	SUPPORT TRACEUR	HALTERUNG REIHENANREISSER	SOPORTE MARCADOR DE FILAS
96	G36200241	SCONTRO U Q.80	STRIKER PLATE 'U' 80	BUTEE 'U' 80	ANSCHLAG 'U' 80	ELEMENTO DE EMPALME 'U' 80
97	F05100156	TAPPO PER TUBO 70X70	PLUG PIPE 70X70	BOUCHON TUBE 70X70	ROHRPFROPFEN 70X70	TAPN TUBO 70X70 D

TAV. 210

Versione SEME / SEED version

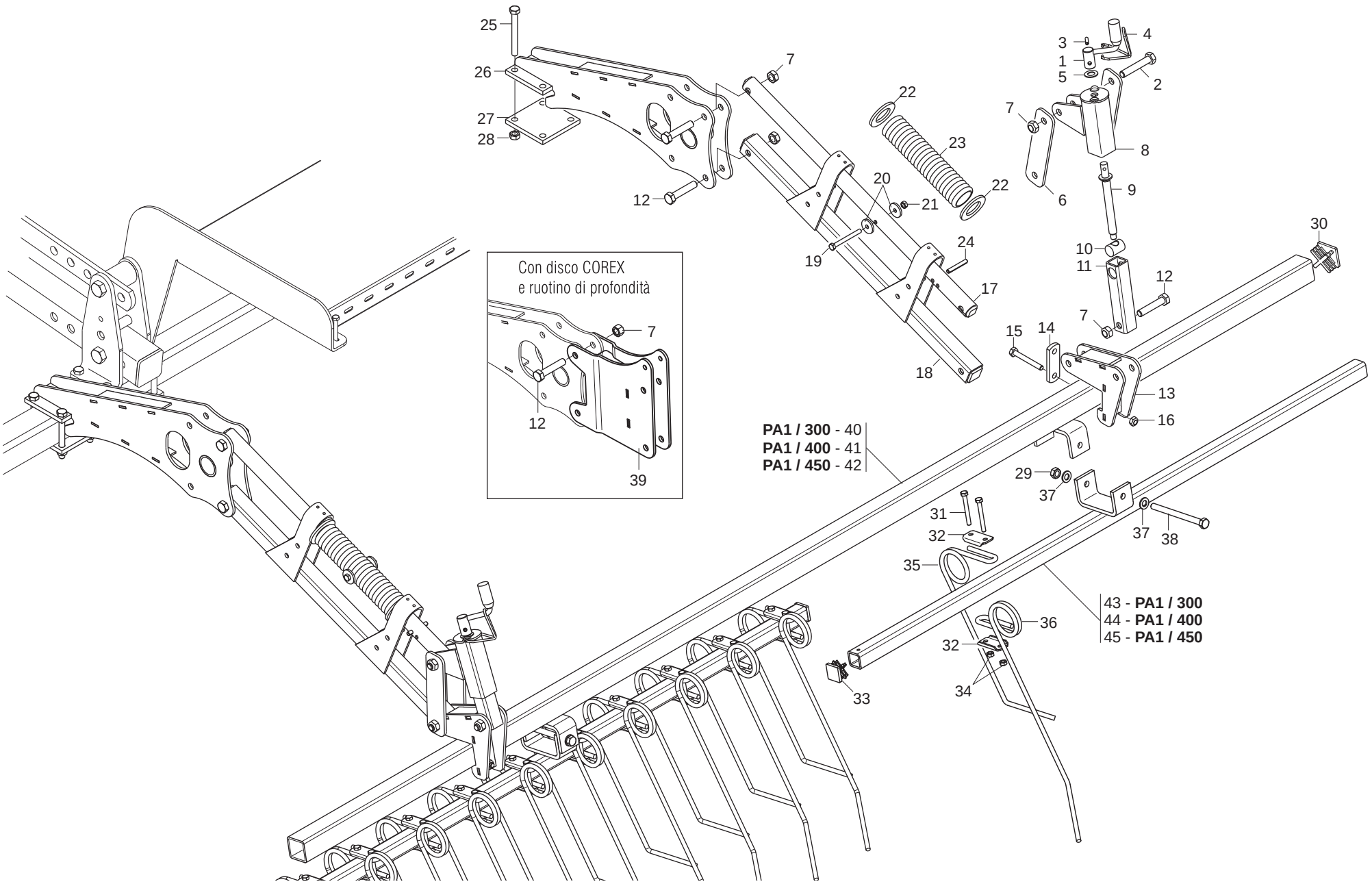

GASPARDO

ERPICE COPRISEME

TAV. 210

Pos.	Cod.	Descrizione	Description	Description	Benennung	Descripcion
1	G22270235	MANIGLIA REGOLAZIONE B4	ADJUSTMENT HANDLE B4	POIGNEE REGLAGE B4	EINSTELLGRIFF B4	MANIJA REGULACIN B4 M
2	F01020210	VITE M14X 2X 80 U5737 8.8 ZN	BOLT M14X 2X 80 U5737 8.8 ZG	VIS M14X 2X 80 U5737 8.8 ZG	SCHRAUBE M14X 2X 80 U5737 8.8	TORNILLO M14X 2X 80 U5737 8.8
3	F02100109	SPINA E.P. 6X 24 U6873 C70 BR	PIN EL. .6 X24 DIN 1481	FICHE EL. 6 X24 DIN 1481	SPANNSTIFT 6 X24 DIN 1481	CLAVIJA EL.6 X24 DIN 1481
4	G65336100	MOLLA SPEC.FERMO MANIGLIA SP	SPEC SPRING HANDLE STOP SP	RESSORT SPEC. ARRET POIGNEE SP	SPEZIALFEDER GRIFFSPERRE SP	MUELLE ESPEC. BLOQUEO MANIJA S
5	G20970149	RONDELLA D.15X28X1,5	WASHER D.15X28X1-5	RONDELLE D. 15X28X1-5	UNTERLEGSCHEIBE D.15X28X1-5	ARANDELA D.15X28X1-5
6	G16243470	SCONTRO 200X50 -6 2F14 155	STRIKER 200X50 -6 2F14 155	BUTEE 200X50 -6 2F14 155	ANSCHLAG 200X50 -6 2F14 155	ELEMENTO DE EMPALME 200X50 -6
7	F01220255	DADO M14X 2 D980 8 ZN	NUT- TRISTOP M14	ECROU TRISTOP M14	MUTTER TRISTOP M14	TUERCA TRISTOP M14
8	G16243580	TUBO REGOLAZIONE	ADJUSTMENT TUBE	TUBE REGLAGE	ROHR EINSTELLUNG	TUBO REGULACION
9	G22505058	VITE DI REGOLAZIONE POSTERIORE	REAR ADJUSTMENT BOLT	VIS DE REGLAGE ARRIERE	HINTERE EINSTELLSCHRAUBE	TORNILLO DE REGULACIN TRASEROS
10	G22230063	ELEMENTO ARTICOLATO	ARTICULATED ELEMENT	ELEMENT ARTICULE	GELENKELEMENT	ELEMENTO ARTICULADO
11	G16243530	TUBO INTERNO DI REGOLAZIONE	INTERNAL PIPE	TUBE INT.	INNENROHR	TUBO INTERIOR
12	F01020207	VIT. M14X 2X 70 U5737 8.8 ZN	BOLT M 14X70	VIS M 14X70	SCHRAUBE M 14X70	TORNILLO M 14X70
13	G16243491	SUPPORTO ERPICE				
14	G20890017	SCONTRO	STRIKER PLATE	BUTEE	ANSCHLAG	ELEMENTO DE EMPALME
15	F01020128	VITE M10X 1,5X80 U5737 8.8 ZN				
16	F01220033	DADO M10X 1,5 D980 8 ZN	NUT M10X 1,5 D980 8 ZB	ECRO.M10X 1,5 D980 8 ZB	MUTT.M10X 1,5 D980 8 ZB	TUER.M10X 1,5 D980 8 ZB
17	G16041760	TUBO SUP.ERPICE	PIPE SUPPORT	TUBE SUPPORT	ALTERUNGSROHR	TUBO SOPORTE
18	G16243441	TUBO INFERIORE ERPICE				
19	F01020086	VITE M 8X1,25X80 U5737 8.8 ZN	BOLT M8X1X80	VIS M8X1X80	SCHRAUBE M8X1X80	TORNILLO M8X1X80
20	G20970032	RONDELLA 32X4X8,5	WASHER 32X4X8-5	RONDELLE 32X4X8-5	UNTERLEGSCHEIBE 32X4X8-5	ARANDELA 32X4X8-5
21	F01220022	DADO M 8X1,25 D980 8 ZN	SELF LOCKING NUT M8X1,25 980V	ECROU AUTOBL. M8X1,25 980-V	SELBSTSP.MUTT. M8X1,25 980-V	DADO AUTOBL. M8X1,25 980-V
22	F01420118	ROS.M36 39X 66X 5 U6593 ZN	WASHER 39X66X5 6593	RONDELLE 39X66X5 6593	UNTERLEGSCHEIBE 39X66X5 6593	ARANDELA 39X66X5 6593
23	G18903560	MOLLA COMPRESSIONE ERPICE	SPRING.	RESSORT COMPL.	DRUCKFEDER	MUELLE COMP.
24	F02100146	SPINA E.P. 8X 55 U6873 C70 BR	PIN EL. .8 X55 DIN 1481	FICHE EL.8 X55 DIN 1481	SPANNSTIFT 8 X55 DIN 1481	CLAVIJA EL.8 X55 DIN 1481
25	F01020172	VITE M12X1,75X110 5737 8.8 ZN	BOLT 12X110 5737 8.G GALVANIZ.	VIS 12X110 5737 8.G ZN	SCHRAUBE 12X110 5737 8.G ZN	TORNILLO 12X110 5737 8.G ZN
26	G16042910	SUPPORTO ERPICE				
27	G16010170	SCONTRO 4 FORI	STRIKER PLATE 4 HOLES	BUTEE 4 TROUS	ANSCHLAG 4 LTCHER	ELEM. DE EMPALME 4 ORIFICIOS
28	F01230059	DADO M12X1,75 D982 8 ZN	NUT M12X1,75 D982 8 ZB	ECRO.M12X1,75 D982 8 ZB	MUTT.M12X1,75 D982 8 ZB	TUER.M12X1,75 D982 8 ZB
29	F01220048	DADO M12X1,75 D980 8 ZN	SELF LOCKING NUT M12X1,75 980V	ECROU AUTOBL. M12X1,75 980-V	SIEHE 00553312	DADO AUTOBL. M12X1,75 980-V
30	F20120349	PUNTALE Q.50 ALETT.POLIT.NERO				
31	F01020083	VITE M 8X1,25X70 U5737 8.8 ZN	BOLT M 8X70	VIS M 8X70	SCHRAUBE M 8X70	TORNILLO M 8X70
32	G07000026	PIASTR.DENTI A MOLLA ZN	GALVAN. SPRING TOOTHED PLATE	PLAQUE DENTS A RESSORT ZN	PLATTE FEDERZZHNE ZN	PLACA DIENTES DE MUELLE ZN
33	F20120346	PUNTALE Q 35 ALETT.POLIT.NERO				
34	F01220022	DADO M 8X1,25 D980 8 ZN	SELF LOCKING NUT M8X1,25 980V	ECROU AUTOBL. M8X1,25 980-V	SELBSTSP.MUTT. M8X1,25 980-V	DADO AUTOBL. M8X1,25 980-V
35	G18903640	MOLLA CORTA COPRISEME D.9	SPEC. SPRING SHORT TOOTH D.9	DENT HERSE RECOUVR COURTE D.9	SPEZIALFEDER M. KURZ.ZAHN D.9	MUELLE ESPEC.DIENTE CORTO D.9
36	G18903650	MOLLA LUNGA COPRISEME D.9	SPEC. SPRING LONG TOOTH D.9	DENT HERSE RECOUVR LONGUE D.9	SPEZIALFEDER M. LANG.ZAHN D.9	MUELLE ESPEC.DIENTE LARGO D.9
37	F01410076	ROS.M12 13X 24X2,5 U6592 ZN	PLANE WASHER D12 UNI 6592 ZN	RONDELLE D12 UNI 6592 ZN	SCHEIBE D12 UNI 6592 ZN	ARANDELA D12 UNI 6592 ZN
38	F01020179	VITE M12X1,75X150 5737 8.8 ZN	BOLT 12X150 5737 8.G GALVANIZ.	VIS 12X150 5737 8.G ZN	SCHRAUBE 12X150 5737 8.G ZN	TORNILLO 12X150 5737 8.G ZN
39	G16041740	PROLUNGA ERPICE COPRISEME	EXTENSION	RALLONGE	VERLZNGERUNG	PROLONGACION
40	G16243560	TUBO SUPPORTO ERPICE	HARROW SUPPORT TUBE	TUBE SUP.HERSE	ROHR EGGENHALTERUNG	TUBO SOP.GARDA
41	G16243710	TUBO SUPPORTO ERPICE	HARROW SUPPORT TUBE	TUBE SUP.HERSE	ROHR EGGENHALTERUNG	TUBO SOP.GARDA
42	G16042840	TUBO SUPPORTO ERPICE 450				
43	G16240430	TUBO INFERIORE ERPICE	LOWER HARROW TUBE	TUBE INFERIEUR HERSE	UNTERES ROHR EGGE	TUBO INFERIOR GRADA
44	G16240840	TUBO INF.ERPICE M400				
45	G16042860	TUBO INF.ERPICE 450				

TAV. 220

Versione SEME / SEED version

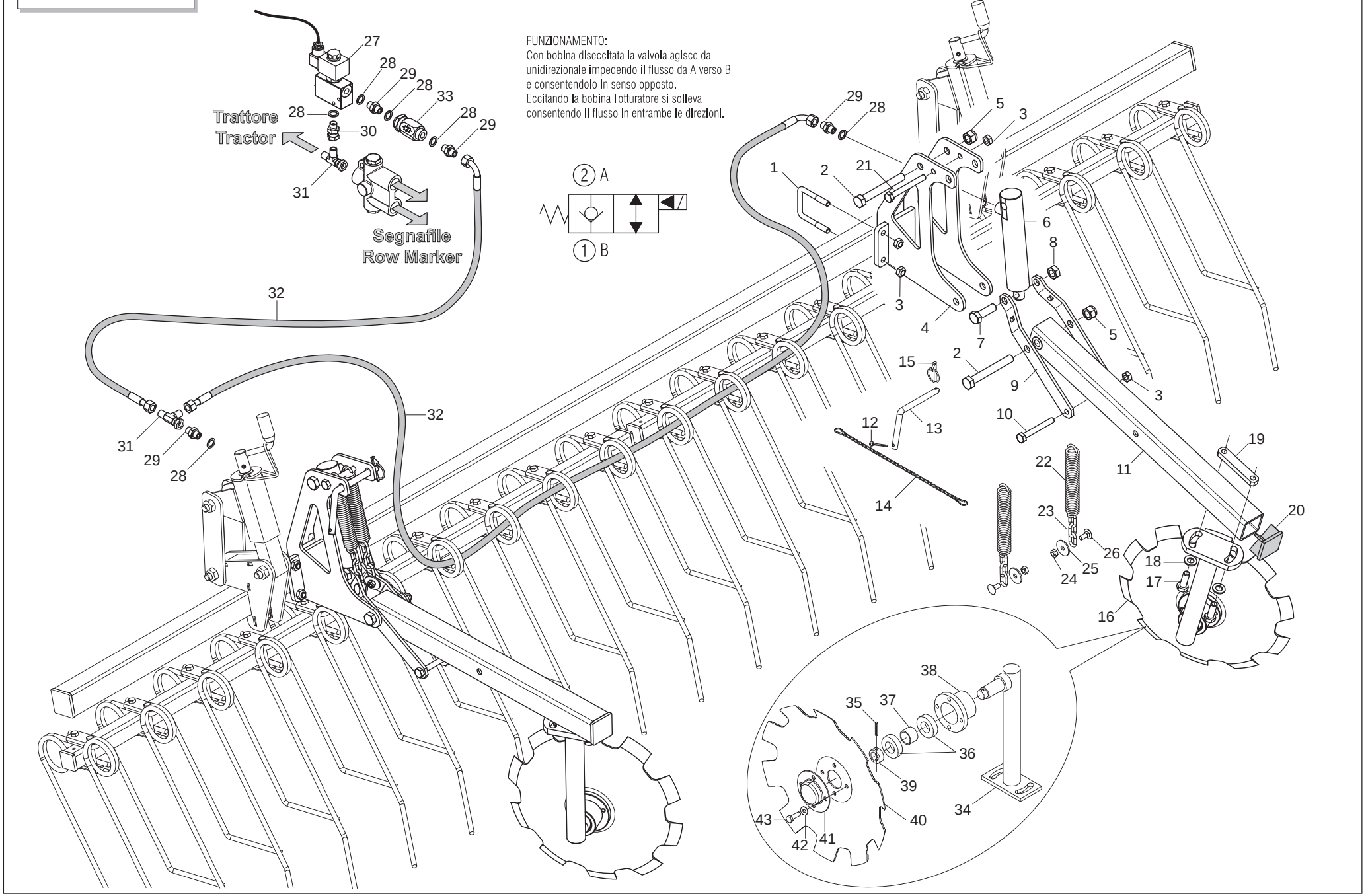

GASPARDO

TRACCIASENTIERI POSTERIORE

TAV. 220

Pos.	Cod.	Descrizione	Description	Description	Benennung	Descripcion
1	F20110715	CAV.Q.M10X 1,5X 30 61X 80 ZN				
2	F01020214	VITE M14X 2X100 U5737 8.8 ZN	BOLT 14X100 5737 8.G GALVANIZ.	VIS 14X100 5737 8.G ZN	SCHRAUBE 14X100 5737 8.G ZN	TORNILLO 14X100 5737 8.G ZN
3	F01220033	DADO M10X 1,5 D980 8 ZN	NUT M10X 1,5 D980 8 ZB	ECRO.M10X 1,5 D980 8 ZB	MUTT.M10X 1,5 D980 8 ZB	TUER.M10X 1,5 D980 8 ZB
4	G16070940	SUPPORTO TRACCIASENTIERI	SUPPORT	SUPPORT	HALTERUNG	SOPORTE
5	F01230072	DADO M14X1,5 D982 6.6 ZN	SELF LOCKING NUT M14X1,5	ECROU AUTOBL. M14X1,5	SELBSTSP.MUTT. M14X1,5	DADO AUTOBL. M14X1,5
6	G16910360	CILINDRO SE 25X35-100	CYLINDER SE 25X35-100	CYLINDRE SE 25X35-100	ZYLINDER SE 25X35-100	CILINDRO SE 25X35-100
7	F01020198	VITE M14X 2X 45 U5737 8.8 ZN	BOLT 14X45 5737 8.G GALVANIZ.	VIS 14X45 5737 8.G ZN *	SCHRAUBE 14X45 5737 8.G ZN *	TORNILLO 14X45 5737 8.G ZN *
8	F01220255	DADO M14X 2 D980 8 ZN	NUT- TRISTOP M14	ECROU TRISTOP M14	MUTTER TRISTOP M14	TUERCA TRISTOP M14
9	G16070930	LEVA SOLLEVAMENTO	LIFTING LEVER	LEVIER LEVAGE	HEBEL HEBUNG	PALANCA LEVANTAMIENTO
10	F01020128	VITE M10X 1,5X80 U5737 8.8 ZN				
11	G16070850	BRACCIO SUPPORTO DISCO	DISK ARM	BRAS DISQUE	SCHEIBENARM	BRAZO DISCO
12	F02200227	COPIGLIA 5X 30 U1336 ZN	SPLIT PIN 5 X30 1336 GALVAN.	GOUPILLE 5 X30 1336 ZN	SPLINT 5 X30 1336 ZN	PASADOR 5 X30 1336 ZN
13	G14212010	CHIAVISTELLO PUNTELLO PIEGH.ZN				
14	G13812311	CATENELLA CON MOSCHETTONE	CHAIN WITH SPRING CATCH	CHAINETTE AVEC MOUSQUETON	KETTE MIT KARABINERHAKEN	CADENA CON GANCHO
15	F02200452	SPINA SCATTO D.4,4 B/80 ZN	SNAP PIN D.4-4 B/80	FICHE A DETENTE D. 4-4 B/80	EINRASTSTIFT D 4-4 B/80	CLAVIJA DE MUELLE D.4-4 B/80
16	G15317291	DISCO SEGNAFILE COMPLETO	COMPLETE ROW MARKER DISK	DISQUE TRACEUR COMPLET	REIHENANREISSERSCHEIBE KOMPLET	DISCO MARCADOR DE FILAS COMPL
17	F01020512	VITE M12X1,75X35 U5739 8.8 ZN	SCREW M 12X35	VIS M 12X35	SCHRAUBE M 12X35	TORNILLO M 12X35
18	F01410076	ROS.M12 13X 24X2,5 U6592 ZN	PLANE WASHER D12 UNI 6592 ZN	RONDELLE D12 UNI 6592 ZN	SCHEIBE D12 UNI 6592 ZN	ARANDELA D12 UNI 6592 ZN
19	G16070920	SCONTRO 100X20 -10 2M12 80	STRIKER PLATE 100X20 -10 2M12	BUTEE 100X20 -10 2M12 80	ANSCHLAG 100X20 -10 2M12 80	ELEMENTO DE EMPALME 100X20
20	F20120349	PUNTALE Q.50 ALETT.POLIT.NERO				
21	F01020130	VITE M10X 1,5X90 U5737 8.8 ZN	BOLT M 10X90	VIS M 10X90	SCHRAUBE M 10X90	TORNILLO M 10X90
22	G18903540	MOLLA TRAZIONE SCARPETTE	PLANTER SHOE TRACTION SPRING	RESSORT TRACTION SABOTS	ZUGFEDER SZSCHAREN	MUELLE TRACCIN GUA APOYO AR
23	G16041240	CATENA GENOVESE D.5 L.79 ZN	GENOAN CHAIN D.5 L.79 ZN	CHAINE GENOISE D.5 L.79 ZN	KETTE GENOVESE D.5 L.79 ZN	CADENA GENOVESA D.5 L.79 ZN
24	F01220022	DADO M 8X1,25 D980 8 ZN	SELF LOCKING NUT M8X1,25 980V	ECROU AUTOBL. M8X1,25 980-V	SELBSTSP.MUTT. M8X1,25 980-V	DADO AUTOBL. M8X1,25 980-V
25	F01420048	ROS.M8 8,4X 24X 2 U6593 ZN	PLANE WASHER D.8	RONDELLE D.8	SCHEIBE D.8	ARANDELA D.8
26	F01060040	BUL.M 8X1,25X 20 U5732 4.6 ZG	BOLT 8 X20 5732 4.6 GALVANIZED	VIS 8 X20 5732 4.6 ZN	SCHRAUBE 8 X20 5732 4.6 ZN	TORNILLO 8 X20 5732 4.6 ZN
27	G16070900	VALVOLA CABLATA	VALVE	SOUPAPE	VENTIL	VALVULA
28	F03151238	RONDELLA RAME 13X19X1,5 -1/4"	1/4 COPPER WASHER	RONDELLE CUIVRE 1/4	UNTERLEGSCHEIBE KUPFER 1/4	ARANDELA COBRE 1/4
29	F03150266	NIPPLO MM CIL-CIL 1/4-1/4 ZN	NIPPLE GALV.CYL.MALE 1/4 ZN	NIPPLE MALE CYL. 1/4 ZN	NIPPELZYL.1/4 ZN	NIPLE MACHO CIL.1/4 ZN
30	F03150045	NIPPLO MF GIREVOLE 1/4 ZN CIL	NIPPLE M-F SWIVEL 1/4 ZG CIL	NIPPLE M-F TOURNANT 1/4 ZG CIL	NIPPEL M-F DREHBAR 1/4 ZG CIL	NIPLE M-H GIRATORIO 1/4 ZG CIL
31	F03151217	RACCORDO -T- LATER.M-M-FG 1/4	T M-FG-M + CONNECTION PIPE	RACCORD T M-FG-M 1/4	ANSCHLUSST M-FG-M 1/4	UNION T M-HG-M 1/4
32	G22505140	TUBO 1/4R2 C-F 1/4 L.2350 LM	PIPE 1/4R1 C-F 1/4 L.2350 LM	TUBE 1/4R1 C-F 1/4 L. 2350 LM	ROHR 1/4R1 C-F 1/4 L.2350 LM	TUBO 1/4R1 C-F 1/4 L.2350 LM
33	F03151226	REGOL.DI FLUSSO VRF 1/4' GAS	1/4' GAS VALVE VRF	SOUPAPE REG DEBIT VRF 1/4" GAZ	VENITL VRF 1/4' GAS	VæLVULA VRF 1/4' GAS
34	G15317282	SUPPORTO DISCO SEGNAFILE	ROW MARKER DISC SUPPORT	SUPPORT DISQUE TRACEUR	HALTERUNG SPURRREISSERSCHEIBE	SOPORTE DISCO MARCADOR SURCOS
35	F02100087	SPINA E.P. 5X 30 U6873 C70 BR	PIN EL. 5 X30 DIN 1481	FICHE EL. 5 X30 DIN 1481	SPANNSTIFT 5 X30 DIN 1481	CLAVIJA EL.5 X30 DIN 1481
36	F04010135	CUSC.D25 D47 B12 6005 2RS EX>				
37	G16112230	BOCCOLA 25,5X30X20	BUSH 25.5X30X20	DOUILLE 25,5X30X20	BUCHSE 25,5X30X20	MANGUITO 25,5X30X20
38	G16112220	FLANGIA PORTA CUSCINETTI ZN	BEARING-HOLDER FLANGE	BRIDE PORTE-ROULEMENTS	LAGERHALTERUNGSFLANSCHE	BRIDA PORTA COJINETES
39	G22270081	FERMO ASSE	AXLE STOP	ARRET AXE	FESTSTELLVORRICHTUNG ACHSE	BLOQUEO EJE
40	G14010130	DISCO SEGNAF. NOTILL				
41	G16112240	CHIUSURA CUSCINETTO	BEARING CLOSURE	FERMETURE ROULEMENT	LAGERVERSCHLUSS	CIERRE COJINETE
42	F01430059	ROS.M8 8,4X 15X0,8 U8842J ZN	WASHER D8 DIN 6798 D.INT.ZN	RONDELLE D8 DIN 6798 D. INT. Z	UNT. SCHEIBE D8 DIN 6798 D. IN	ARANDELA D8 DIN 6798 D.INT.ZN
43	F01020436	VITE M 8X1,25X 20 U5739 8.8 ZN	BOLT M 8X20	VIS M 8X20	SCHRAUBE M 8X20	TORNILLO M 8X20

TAV. 230

Versione CONCIME / FERTILIZER version

MTI XL / SI XL
MERY / SILVIA

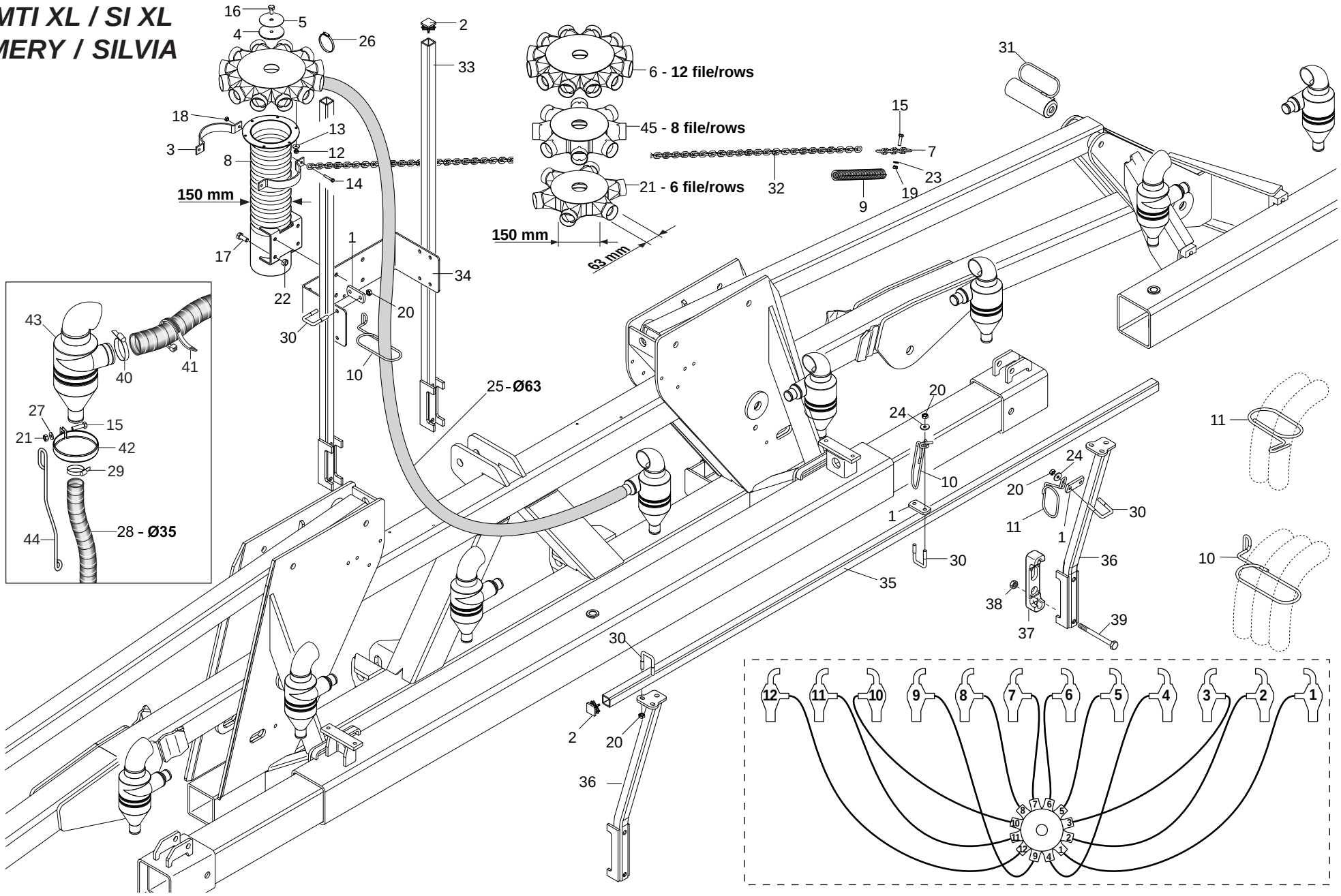

GASPARDO

DISTRIBUZIONE CONCIME - MTI XL / SI XL - MERY / SILVIA

TAV. 230

Pos.	Cod.	Descrizione	Description	Description	Benennung	Descripcion
1	G15475260	SCONTRO SP	STRIKER PLATE SP	BUTEE SP	ANSCHLAG STREUER	ELEMENTO DE EMPALME SP
2	F20120346	PUNTALE Q 35 ALETT.POLIT.NERO				
3	G16124400	FASCETTA TUBO D.150 ZN				
4	G16021530	CONO DEVIATORE	CONICAL DEVIATOR	CONE DEVIATEUR	KLOTZ UMLEITHEBEL	CONO DESVIADOR
5	G16021560	TAPPO	CLOSURE TAP	BOUCHON DE FERMETURE	ABSCHLUSSPFROPFEN	TAPN DE CIERRE
6	G17321441	ASS.DISTR. INOX 12U 30° D.63				
7	G16040140	CATENA D.5 L.171 ZN	GENOAN CHAIN D.5	CHAINE GENOISE D. 5	KETTE GENOVESE D.5	CADENA GENOVESA D.5
8	G17321661	ASS.TUBO MISCELATORE D150				
9	G65337040	MOLLA TRAZ.ELEMENTO MT600	TRACTION SPRING MT600	RESSORT TRACT. ELEMENT MT600	ZUGFEDER ELEMENT MT600	MUELLE TRACC. ELEMENTO MT600
10	G18903860	MOLLA GUIDA 3 TUBI ZN				
11	G18903850	MOLLA SPEC.ZN GUIDA 2 TUBI DEP				
12	F01230024	DADO M 6X 1 D982 A2 IX	NORM.SELF-LOCKING NUT 10	ECROU AUTOB.NOR.10	SELBSTSP. MUTTER NOR. 10	TUERCA AUTOB. NOR. 10
13	F01410034	ROS.M6 6,4X12,5X1,6 U6592 IX	INOX A2 WASHER D6 UNI 6592	RONDELLE D6 UNI 6592 INOX A2	UNTERLEGSCHEIBE D6 UNI 6592 IN	ARANDELA D6 UNI 6592 INOX A2
14	F01020411	VITE M 6X 1X 35 U5739 8.8 ZN	BOLT 6 X35 5739 8.G GALVANIZ.	VIS 6 X35 5739 8.G ZN	SCHRAUBE 6 X35 5739 8.G ZN	TORNILLO 6X35 5739 8.G ZN
15	F01020445	VIT.M 8X1,25X 30 U5739 8.8 ZN	BOLT M 8X30	VIS M 8X30	SCHRAUBE M 8X30	TORNILLO M 8X30
16	F01020470	VITE M10X 1,5X20 U5739 8.8 ZN	BOLT M 10X20	VIS M 10X20	SCHRAUBE M 10X20	TORNILLO M 10X20
17	F01020510	VITE M12X1,75X30 U5739 8.8 ZN	BOLT M 12X30	VIS M 12X30	SCHRAUBE M 12X30	TORNILLO M 12X30
18	F01230022	DADO M 6X 1 D982 8 ZN	NORM.SELF-LOCKING NUT 6 GALVAN	ECROU AUTOB.NOR.6 ZN	SELBSTSP. MUTTER NOR.6 ZN	TUERCA AUTOB. NOR. 6 ZN
19	F01200244	DADO M 8X1,25 U5588 6.8 ZN	NUT M8	ECROU M8	MUTTER M8	DADO M8
20	F01200270	DADO M10X 1,5 U5588 6.8 ZN	NUT M10	ECROU M10	MUTTER M10	DADO M10
21	G17321391	ASS.DISTR. INOX 6U 60° D.63				
22	F01220048	DADO M12X1,75 D980 8 ZN	SELF LOCKING NUT M12X1,75 980V	ECROU AUTOBL. M12X1,75 980-V	SIEHE 00553312	DADO AUTOBL. M12X1,75 980-V
23	F01410051	ROS.M8 8,4X 17X1,6 U6592 ZN	PLANE WASHER D.8	RONDELLE D.8	SCHEIBE D.8	ARANDELA D.8
24	F01410064	ROS.M10 10,5X 20X 2 U6592 ZN	WASHER 10,5X21	RONDELLE 10,5X21	SCHEIBE 10,5X21	ARANDELA 10,5X21
25	F03100431	TUBO EOLO 63 PU				
26	F02300022	FASCETTA STRING. 50/70 H.9	FASTEN. STRAPS 50/70 H.9	COLLIER DE SERRAGE 50/70 H.9	SCHELLE 50/70 H.9	ABRAZADERA 50/70 H.9
27	F01420048	ROS.M8 8,4X 24X 2 U6593 ZN	PLANE WASHER D.8	RONDELLE D.8	SCHEIBE D.8	ARANDELA D.8
28	F03100500	TUBO EOLO 35 PU	EOLO PIPE 35 PU	TUBE EOLO 35 PU	ROHR EOLO 35 PU	TUBO EOLO 35 PU
29	F02300020	FASCETTA STRING. 32/50 H.9	STRING FASTEN.STRAPS 32/50 H.9	COLLIER 32/50 H.9	SCHELLE 32/50 H.9	ABRAZADERA 32/50 H.8
30	F20110706	CAV.Q.M10X 1,5X 30 47X 60 ZN	DISK SUPPORT.ELEMENT U BOLT SV	CAVALIER SUPPORT DISQUE SV	VERBINDUNG SCHEIBENHALTERUNG S	PERNO EN U SOP. DISCO SV
31	G14275410	GUIDA TUBI				
32	G14275400	CATENA GENOVESE D.5 L.2700 ZN				
33	G14275380	SUPPORTO CONVOGLIATORE				
34	G14275390	STAFFA ATTACCO CONVOGLIATORE				
35	G15475130	TUBO SUPPORTO SERBATOIO L.2480	TANK SUPPORT PIPE L.2480	TUBE SUPPORT RESERVOIR L2460	ROHR HALTERUNG BEHZLTER L.2480	TUBO SOPORTE DEPSITO L 2480 T
36	G14276122	SUPPORTO MICRO S.SPANDI	MICRO SUPPORT	SUPPORT MICRO	MIKRO HALTERUNG	SOPORTE MICRO
37	G19204030	SCONTRO FISS.150 2F D15				
38	F01200306	DADO M14X 2 U5588 6.8 ZN	NUT M14X2	ECROU M14X2	MUTTER M14X2	DADO M14X2
39	F01020236	VITE M14X 2X220 U5737 8.8 BR	SCREW M14X2X220 U5737 8.8 BR	VIS M14X2X220 U5737 8.8 BR	SCHRAUBE M14X2X220 U5737 8.8	TORNILLO M14X2X220 U5737 8.8
40	F02300023	FASCETTA STRING. 80/100 H.8	PIPE CLAMP 77/95	COLLIER DE SERRAGE 77/95	ROHRSCHELLE 77/95	ABRAZADERA PARA MANGUERA 77/95
41	F05150060	FASCETTA POLYAMIDE 9X360 31919	POLYAMIDE FASTENING STRAPS 9X3	COLLIER POLYAMIDE 9X350 31919	SCHELLE POLYAMID 9X350 31919	ABRAZADERA POLIAMIDA 9X350 319
42	G17321481	FASCETTA VASO ESPANSIONE D130				
43	G19006000	ASS.VASO ESPANSIONE D130				
44	G18903960	MOLLA SUPPORTO VASO ESPANSORE	EXPANSION TANK SUPPORT SPRING	RESSORT SUPPORT VASE DÆ EXPANS	FEDERHALTERUNG EXPANSIONSGEF-S	MUELLE SOPORTE VASO EXPANSION
45	G17321621	ASS.DISTR. INOX 8U 45° D.63				

TAV. 240

Versione CONCIME / FERTILIZER version

MAESTRA

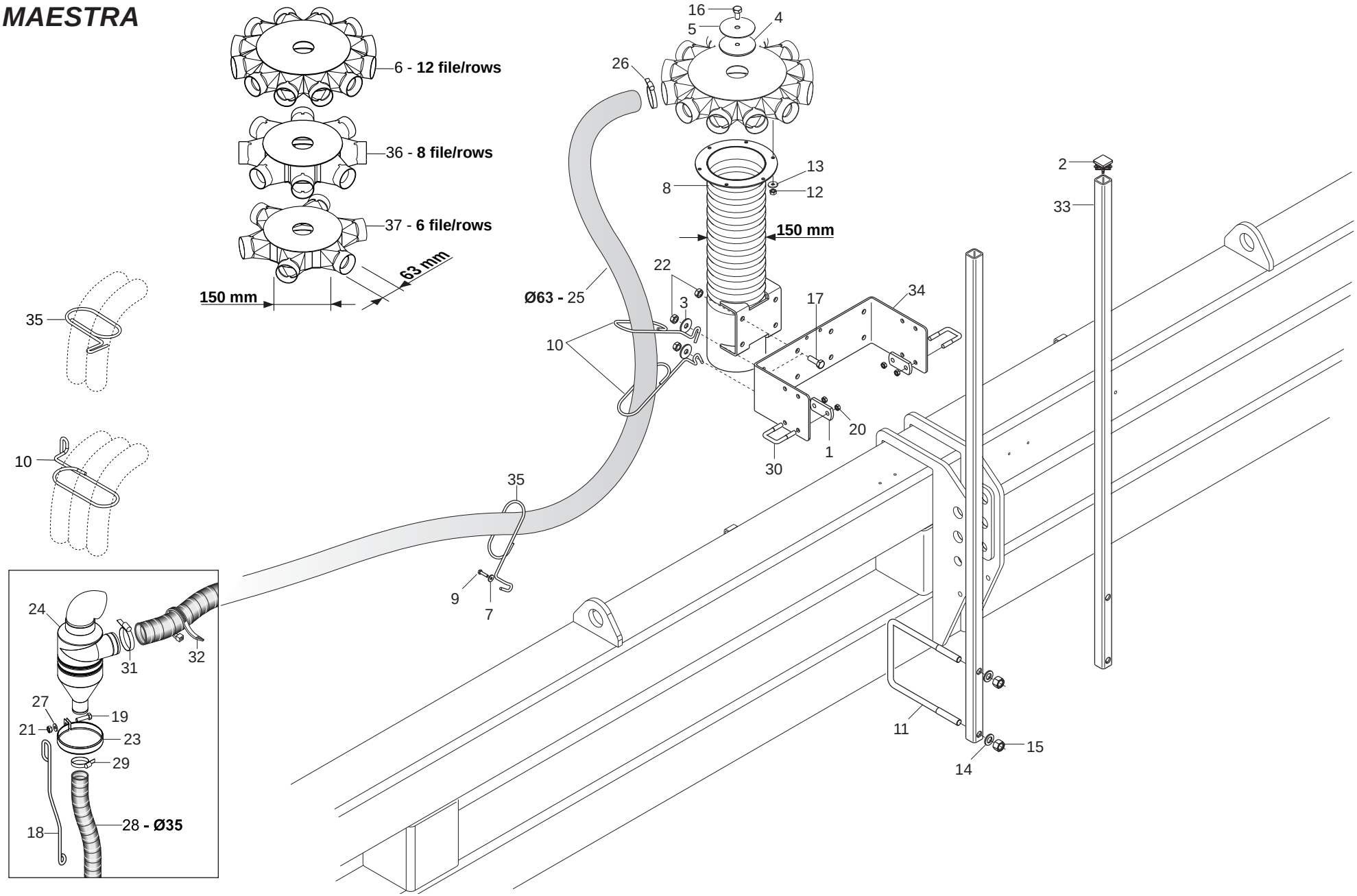

GASPARDO

DISTRIBUZIONE CONCIME - MAESTRA

TAV. 240

Pos.	Cod.	Descrizione	Description	Description	Benennung	Descripcion
1	G15475260	SCONTRO SP	STRIKER PLATE SP	BUTEE SP	ANSCHLAG STREUER	ELEMENTO DE EMPALME SP
2	F20120346	PUNTALE Q 35 ALETT.POLIT.NERO				
3	G20970085	RONDELLA 40X4X13	WASHER 40X4X13	RONDELLE 40X4X13	UNTERLEGSCHEIBE 40X4X13	ARANDELA 40X4X13
4	G16021530	CONO DEVIATORE	CONICAL DEVIATOR	CONE DEVIATEUR	KLOTZ UMLEITHEBEL	CONO DESVIADOR
5	G16021560	TAPPO	CLOSURE TAP	BOUCHON DE FERMETURE	ABSCHLUSSPFROPFEN	TAPN DE CIERRE
6	G17321441	ASS.DISTR. INOX 12U 30° D.63				
7	F01420036	ROS.M6 6,4X 18X 2 U6593 ZN	FLAT WASHER 6-6X 18X2 6593 ZN	ROND. PLATE 6-6X 18X2 6593 ZN	SCHEIBE 6-6X 18X2 6593 ZN	ARAND. PLANA 6-6X 18X2 6593 ZN
8	G17321661	ASS.TUBO MISCELATORE D150				
9	F01020406	VITE M 6X 1X 25 U5739 8.8 ZN	BOLT M 6X25	VIS M 6X25	SCHRAUBE M 6X25	TORNILLO M 6X25
10	G18903860	MOLLA GUIDA 3 TUBI ZN				
11	F20110830	CAV.Q.M16X 2X 75 195X238 ZN	U BOLT M16X195- 238 ZN	CAVALIER M16X195- 238 ZN	VERBINDUNG M16X195- 238 ZN	PERNO EN U M16X195- 238 ZN
12	F01230024	DADO M 6X 1 D982 A2 IX	NORM.SELF-LOCKING NUT 10	ECROU AUTOB.NOR.10	SELBSTSP. MUTTER NOR. 10	TUERCA AUTOB. NOR. 10
13	F01410034	ROS.M6 6,4X12,5X1,6 U6592 IX	INOX A2 WASHER D6 UNI 6592	RONDELLE D6 UNI 6592 INOX A2	UNTERLEGSCHEIBE D6 UNI 6592 IN	ARANDELA D6 UNI 6592 INOX A2
14	F01410100	ROS.M16 17X 30X 3 U6592 ZN	PLANE WASHER D16 UNI 6592 ZN	RONDELLE D16 UNI 6592 ZN	SCHEIBE D.16 UNI 6592 ZN	ARANDELA D16 UNI 6592 ZN
15	F01220011	DADO M 6X 1 D980 8 ZN	SELF LOCKING NUT M6	ECROU AUTOBL. M6	SELBSTSPERR.MUTTER M6	DADO AUTOBL. M6
16	F01020470	VITE M10X 1,5X20 U5739 8.8 ZN	BOLT M 10X20	VIS M 10X20	SCHRAUBE M 10X20	TORNILLO M 10X20
17	F01020510	VITE M12X1,75X30 U5739 8.8 ZN	BOLT M 12X30	VIS M 12X30	SCHRAUBE M 12X30	TORNILLO M 12X30
18	G18903960	MOLLA SUPPORTO VASO ESPANSORE	EXPANSION TANK SUPPORT SPRING	RESSORT SUPPORT VASE DÆ EXPANS	FEDERHALTERUNG EXPANSIONSGEF-S	MUELLE SOPORTE VASO EXPANSION
19	F01020445	VIT.M 8X1,25X 30 U5739 8.8 ZN	BOLT M 8X30	VIS M 8X30	SCHRAUBE M 8X30	TORNILLO M 8X30
20	F01200270	DADO M10X 1,5 U5588 6.8 ZN	NUT M10	ECROU M10	MUTTER M10	DADO M10
21	F01200244	DADO M 8X1,25 U5588 6.8 ZN	NUT M8	ECROU M8	MUTTER M8	DADO M8
22	F01220048	DADO M12X1,75 D980 8 ZN	SELF LOCKING NUT M12X1,75 980V	ECROU AUTOBL. M12X1,75 980-V	SIEHE 00553312	DADO AUTOBL. M12X1,75 980-V
23	G17321481	FASCETTA VASO ESPANSIONE D130				
24	G19006000	ASS.VASO ESPANSIONE D130				
25	F03100431	TUBO EOLO 63 PU				
26	F02300022	FASCETTA STRING. 50/70 H.9	FASTEN. STRAPS 50/70 H.9	COLLIER DE SERRAGE 50/70 H.9	SCHELLE 50/70 H.9	ABRAZADERA 50/70 H.9
27	F01420048	ROS.M8 8,4X 24X 2 U6593 ZN	PLANE WASHER D.8	RONDELLE D.8	SCHEIBE D.8	ARANDELA D.8
28	F03100500	TUBO EOLO 35 PU	EOLO PIPE 35 PU	TUBE EOLO 35 PU	ROHR EOLO 35 PU	TUBO EOLO 35 PU
29	F02300020	FASCETTA STRING. 32/50 H.9	STRING FASTEN.STRAPS 32/50 H.9	COLLIER 32/50 H.9	SCHELLE 32/50 H.9	ABRAZADERA 32/50 H.8
30	F20110706	CAV.Q.M10X 1,5X 30 47X 60 ZN	DISK SUPPORT.ELEMENT U BOLT SV	CAVALIER SUPPORT DISQUE SV	VERBINDUNG SCHEIBENHALTERUNG S	PERNO EN U SOP. DISCO SV
31	F02300023	FASCETTA STRING. 80/100 H.8	PIPE CLAMP 77/95	COLLIER DE SERRAGE 77/95	ROHRSCHELLE 77/95	ABRAZADERA PARA MANGUERA 77/95
32	F05150060	FASCETTA POLYAMIDE 9X360 31919	POLYAMIDE FASTENING STRAPS 9X3	COLLIER POLYAMIDE 9X350 31919	SCHELLE POLYAMID 9X350 31919	ABRAZADERA POLIAMIDA 9X350 319
33	G17321080	TUBO SUPP.DIFFUSORE MAESTRA				
34	G14275390	STAFFA ATTACCO CONVOGLIATORE				
35	G18903850	MOLLA SPEC.ZN GUIDA 2 TUBI DEP				
36	G17321621	ASS.DISTR. INOX 8U 45° D.63				
37	G17321391	ASS.DISTR. INOX 6U 60° D.63				

TAV. 250

Versione CONCIME / FERTILIZER version

MTI / SI

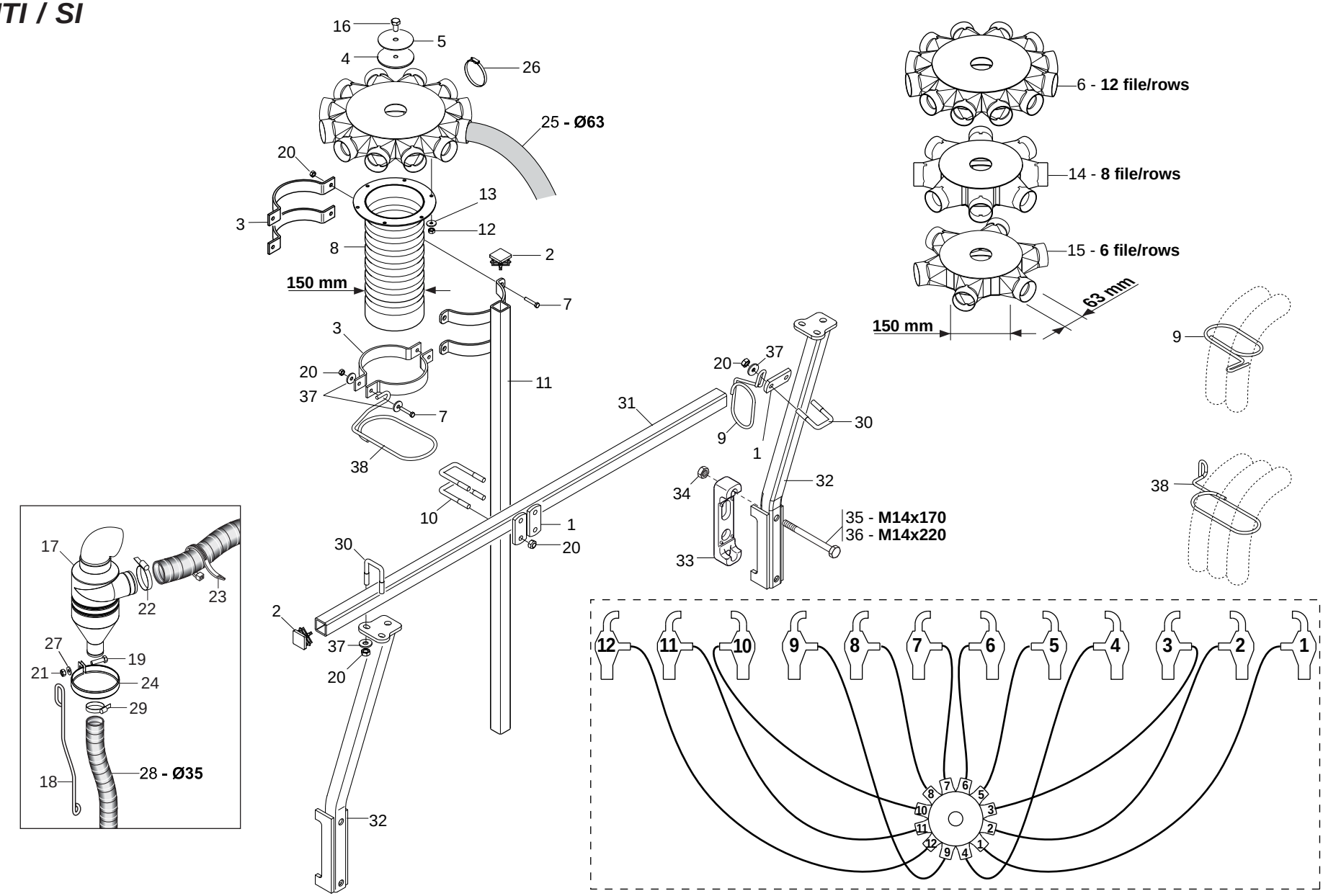

GASPARDO

DISTRIBUZIONE CONCIME - MTI-SI

TAV. 250

Pos.	Cod.	Descrizione	Description	Description	Benennung	Descripcion
1	G15475260	SCONTRO SP	STRIKER PLATE SP	BUTEE SP	ANSCHLAG STREUER	ELEMENTO DE EMPALME SP
2	F20120346	PUNTALE Q 35 ALETT.POLIT.NERO				
3	G16124400	FASCETTA TUBO D.150 ZN				
4	G16021530	CONO DEVIATORE	CONICAL DEVIATOR	CONE DEVIATEUR	KLOTZ UMLEITHEBEL	CONO DESVIADOR
5	G16021560	TAPPO	CLOSURE TAP	BOUCHON DE FERMETURE	ABSCHLUSSPFROPFEN	TAPN DE CIERRE
6	G17321441	ASS.DISTR. INOX 12U 30° D.63				
7	F01020479	VITE M10X 1,5X35 U5739 8.8 ZN	BOLT M 10X35	VIS M 10X35	SCHRAUBE M 10X35	TORNILLO M 10X35
8	G17321681	ASS.TUBO MISC. CORTO D150				
9	G18903850	MOLLA SPEC.ZN GUIDA 2 TUBI DEP				
10	F20110710	CAV.Q.M10X 1,5X 50 51X 85 ZN	U BOLT	CAVALIER	VERBINDUNG	PERNO EN U
11	G16021401	ASS.SUPPORTO TUBO MISCELATORE				
12	F01230024	DADO M 6X 1 D982 A2 IX	NORM.SELF-LOCKING NUT 10	ECROU AUTOB.NOR.10	SELBSTSP. MUTTER NOR. 10	TUERCA AUTOB. NOR. 10
13	F01410034	ROS.M6 6,4X12,5X1,6 U6592 IX	INOX A2 WASHER D6 UNI 6592	RONDELLE D6 UNI 6592 INOX A2	UNTERLEGSCHEIBE D6 UNI 6592 IN	ARANDELA D6 UNI 6592 INOX A2
14	G17321621	ASS.DISTR. INOX 8U 45° D.63				
15	G17321391	ASS.DISTR. INOX 6U 60° D.63				
16	F01020470	VITE M10X 1,5X20 U5739 8.8 ZN	BOLT M 10X20	VIS M 10X20	SCHRAUBE M 10X20	TORNILLO M 10X20
17	G19006000	ASS.VASO ESPANSIONE D130				
18	G18903960	MOLLA SUPPORTO VASO ESPANSORE	EXPANSION TANK SUPPORT SPRING	RESSORT SUPPORT VASE DÆ EXPANS	FEDERHALTERUNG EXPANSIONSGEF-S	MUELLE SOPORTE VASO EXPANSION
19	F01020445	VIT.M 8X1,25X 30 U5739 8.8 ZN	BOLT M 8X30	VIS M 8X30	SCHRAUBE M 8X30	TORNILLO M 8X30
20	F01200270	DADO M10X 1,5 U5588 6.8 ZN	NUT M10	ECROU M10	MUTTER M10	DADO M10
21	F01200244	DADO M 8X1,25 U5588 6.8 ZN	NUT M8	ECROU M8	MUTTER M8	DADO M8
22	F02300023	FASCETTA STRING. 80/100 H.8	PIPE CLAMP 77/95	COLLIER DE SERRAGE 77/95	ROHRSCHELLE 77/95	ABRAZADERA PARA MANGUERA 77/95
23	F05150060	FASCETTA POLYAMIDE 9X360 31919	POLYAMIDE FASTENING STRAPS 9X3	COLLIER POLYAMIDE 9X350 31919	SCHELLE POLYAMID 9X350 31919	ABRAZADERA POLIAMIDA 9X350 319
24	G17321481	FASCETTA VASO ESPANSIONE D130				
25	F03100431	TUBO EOLO 63 PU				
26	F02300022	FASCETTA STRING. 50/70 H.9	FASTEN. STRAPS 50/70 H.9	COLLIER DE SERRAGE 50/70 H.9	SCHELLE 50/70 H.9	ABRAZADERA 50/70 H.9
27	F01420048	ROS.M8 8,4X 24X 2 U6593 ZN	PLANE WASHER D.8	RONDELLE D.8	SCHEIBE D.8	ARANDELA D.8
28	F03100500	TUBO EOLO 35 PU	EOLO PIPE 35 PU	TUBE EOLO 35 PU	ROHR EOLO 35 PU	TUBO EOLO 35 PU
29	F02300020	FASCETTA STRING. 32/50 H.9	STRING FASTEN.STRAPS 32/50 H.9	COLLIER 32/50 H.9	SCHELLE 32/50 H.9	ABRAZADERA 32/50 H.8
30	F20110706	CAV.Q.M10X 1,5X 30 47X 60 ZN	DISK SUPPORT.ELEMENT U BOLT SV	CAVALIER SUPPORT DISQUE SV	VERBINDUNG SCHEIBENHALTERUNG S	PERNO EN U SOP. DISCO SV
31	G15475300	TUBO SUPPORTO MICRO L.1170	MICRO SUPPORT PIPE L.1170	TUBE SUPPORT MICRO L1170	ROHR HALTERUNG MIKRO L.1170	TUBO SOPORTE MICRO L1170
32	G15475411	SUPP.BARRA MICRO M.S.SPAN.	M.S. FERTILISER SPREADER MICRO	SUPPORT BARRE MICRO M.S. EPAND	MIKRO SPINDELHALTERUNG M.S. Ds	SOPORTE BARRA MICRO M.S. ABONA
33	G19204030	SCONTRO FISS.150 2F D15				
34	F01200306	DADO M14X 2 U5588 6.8 ZN	NUT M14X2	ECROU M14X2	MUTTER M14X2	DADO M14X2
35	F01020227	VITE M14X 2X170 U5737 8.8 BR	SCREW 14X170 5737 8.G	VIS 14X170 5737 8.G	SCHRAUBE 14X170 5737 8.G	TORNILLO 14X170 5737 8.G
36	F01020236	VITE M14X 2X220 U5737 8.8 BR	SCREW M14X2X220 U5737 8.8 BR	VIS M14X2X220 U5737 8.8 BR	SCHRAUBE M14X2X220 U5737 8.8	TORNILLO M14X2X220 U5737 8.8
37	F01410064	ROS.M10 10,5X 20X 2 U6592 ZN	WASHER 10,5X21	RONDELLE 10,5X21	SCHEIBE 10,5X21	ARANDELA 10,5X21
38	G18903860	MOLLA GUIDA 3 TUBI ZN				

TAV. 260

Versione CONCIME / FERTILIZER version

MAGICA

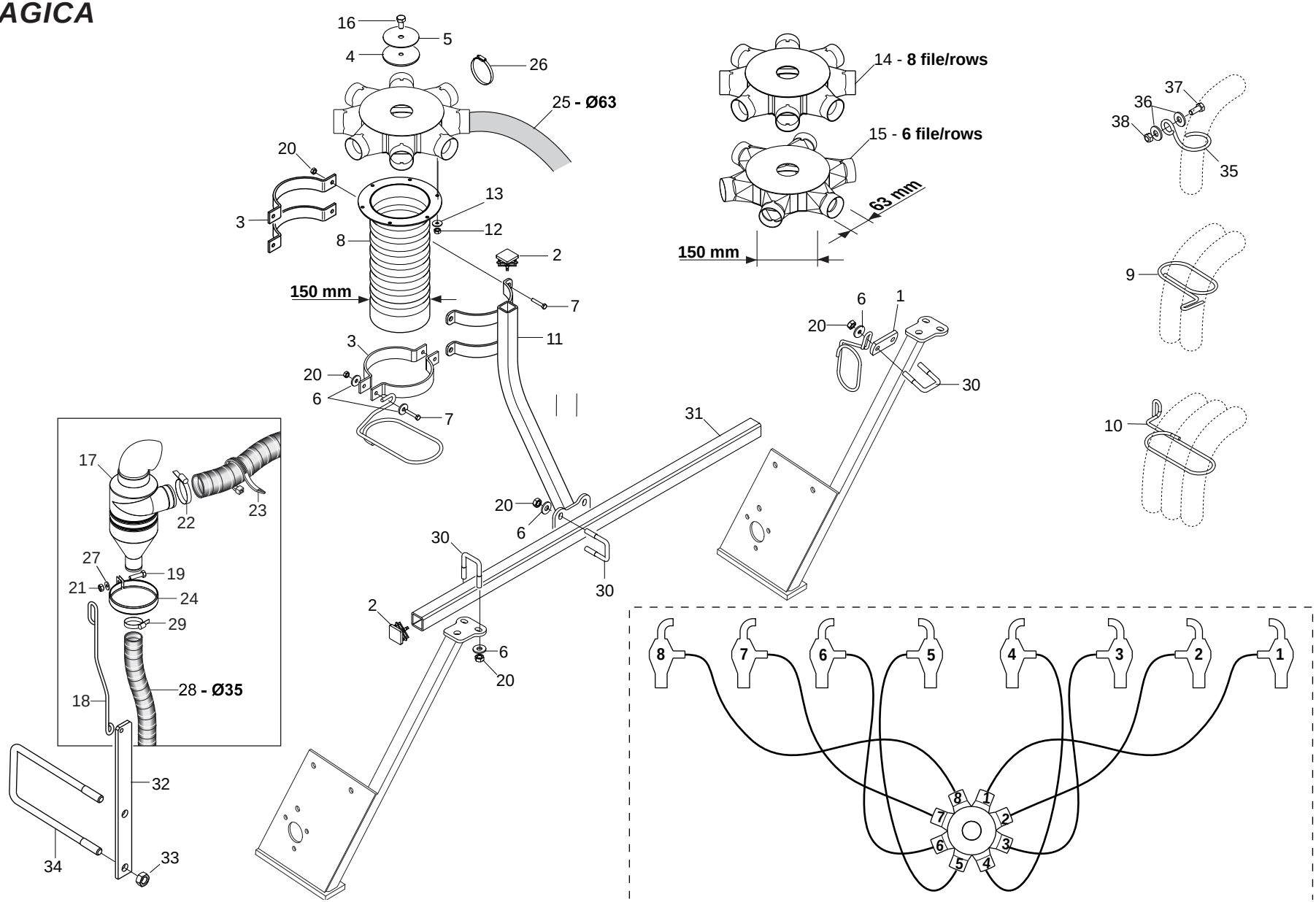

GASPARDO

DISTRIBUZIONE CONCIME - MAGICA

TAV. 260

Pos.	Cod.	Descrizione	Description	Description	Benennung	Descripcion
1	G15475260	SCONTRO SP	STRIKER PLATE SP	BUTEE SP	ANSCHLAG STREUER	ELEMENTO DE EMPALME SP
2	F20120346	PUNTALE Q 35 ALETT.POLIT.NERO				
3	G16124400	FASCETTA TUBO D.150 ZN				
4	G16021530	CONO DEVIATORE	CONICAL DEVIATOR	CONE DEVIATEUR	KLOTZ UMLEITHEBEL	CONO DESVIADOR
5	G16021560	TAPPO	CLOSURE TAP	BOUCHON DE FERMETURE	ABSCHLUSSPFROPFEN	TAPN DE CIERRE
6	F01410064	ROS.M10 10,5X 20X 2 U6592 ZN	WASHER 10,5X21	RONDELLE 10,5X21	SCHEIBE 10,5X21	ARANDELA 10,5X21
7	F01020479	VITE M10X 1,5X35 U5739 8.8 ZN	BOLT M 10X35	VIS M 10X35	SCHRAUBE M 10X35	TORNILLO M 10X35
8	G17321681	ASS.TUBO MISC. CORTO D150				
9	G18903850	MOLLA SPEC.ZN GUIDA 2 TUBI DEP				
10	G18903860	MOLLA GUIDA 3 TUBI ZN				
11	G17170421	ASS.SUPP.TUBO MISCELATORE				
12	F01230024	DADO M 6X 1 D982 A2 IX	NORM.SELF-LOCKING NUT 10	ECROU AUTOB.NOR.10	SELBSTSP. MUTTER NOR. 10	TUERCA AUTOB. NOR. 10
13	F01410034	ROS.M6 6,4X12,5X1,6 U6592 IX	INOX A2 WASHER D6 UNI 6592	RONDELLE D6 UNI 6592 INOX A2	UNTERLEGSCHEIBE D6 UNI 6592 IN	ARANDELA D6 UNI 6592 INOX A2
14	G17321621	ASS.DISTR. INOX 8U 45° D.63				
15	G17321391	ASS.DISTR. INOX 6U 60° D.63				
16	F01020470	VITE M10X 1,5X20 U5739 8.8 ZN	BOLT M 10X20	VIS M 10X20	SCHRAUBE M 10X20	TORNILLO M 10X20
17	G19006000	ASS.VASO ESPANSIONE D130				
18	G18903960	MOLLA SUPPORTO VASO ESPANSORE	EXPANSION TANK SUPPORT SPRING	RESSORT SUPPORT VASE DÆ EXPANS	FEDERHALTERUNG EXPANSIONSGEF-S	MUELLE SOPORTE VASO EXPANSION
19	F01020445	VIT.M 8X1,25X 30 U5739 8.8 ZN	BOLT M 8X30	VIS M 8X30	SCHRAUBE M 8X30	TORNILLO M 8X30
20	F01200270	DADO M10X 1,5 U5588 6.8 ZN	NUT M10	ECROU M10	MUTTER M10	DADO M10
21	F01200244	DADO M 8X1,25 U5588 6.8 ZN	NUT M8	ECROU M8	MUTTER M8	DADO M8
22	F02300023	FASCETTA STRING. 80/100 H.8	PIPE CLAMP 77/95	COLLIER DE SERRAGE 77/95	ROHRSCHELLE 77/95	ABRAZADERA PARA MANGUERA 77/95
23	F05150060	FASCETTA POLYAMIDE 9X360 31919	POLYAMIDE FASTENING STRAPS 9X3	COLLIER POLYAMIDE 9X350 31919	SCHELLE POLYAMID 9X350 31919	ABRAZADERA POLIAMIDA 9X350 319
24	G17321481	FASCETTA VASO ESPANSIONE D130				
25	F03100431	TUBO EOLO 63 PU				
26	F02300022	FASCETTA STRING. 50/70 H.9	FASTEN. STRAPS 50/70 H.9	COLLIER DE SERRAGE 50/70 H.9	SCHELLE 50/70 H.9	ABRAZADERA 50/70 H.9
27	F01420048	ROS.M8 8,4X 24X 2 U6593 ZN	PLANE WASHER D.8	RONDELLE D.8	SCHEIBE D.8	ARANDELA D.8
28	F03100500	TUBO EOLO 35 PU	EOLO PIPE 35 PU	TUBE EOLO 35 PU	ROHR EOLO 35 PU	TUBO EOLO 35 PU
29	F02300020	FASCETTA STRING. 32/50 H.9	STRING FASTEN.STRAPS 32/50 H.9	COLLIER 32/50 H.9	SCHELLE 32/50 H.9	ABRAZADERA 32/50 H.8
30	F20110706	CAV.Q.M10X 1,5X 30 47X 60 ZN	DISK SUPPORT.ELEMENT U BOLT SV	CAVALIER SUPPORT DISQUE SV	VERBINDUNG SCHEIBENHALTERUNG S	PERNO EN U SOP. DISCO SV
31	G15175060	TUBO Q. 35X 4X 900	SQUARE PIPE 35X4X900	TUBE CARRE 35X4X900	VIERKANTROHR 35X4X900	TUBO CUADRADO Q.35X4X900
32	G17170440	SUPP.VASO ESPANSIONE SU TELAIO				
33	F01200306	DADO M14X 2 U5588 6.8 ZN	NUT M14X2	ECROU M14X2	MUTTER M14X2	DADO M14X2
34	F20110775	CAV.Q.M14X 2X 50 135X159 ZN	U BOLT 120	CAVALIER 120	VERBINDUNG 120	PERNO EN U 120
35	G18903971	MOLLA GUIDATUBI D71 ZN				
36	G20970035	RONDELLA 32X4X13	WASHER 32X4X13	RONDELLE 32X4X13	UNTERLEGSCHEIBE 32X4X13	ARANDELA 32X4X13
37	F01020512	VITE M12X1,75X35 U5739 8.8 ZN	SCREW M 12X35	VIS M 12X35	SCHRAUBE M 12X35	TORNILLO M 12X35
38	F01200293	DADO M12X1,75 U5588 6.8 ZN	NUT M12	ECROU M12	MUTTER M12	DADO M12

USATE SEMPRE RICAMBI ORIGINALI
ALWAYS USE ORIGINAL SPARE PARTS
IMMER DIE ORIGINAL-ERSATZTEILE VERWENDEN
***EMPLOYEZ TOUJOURS LES PIECES DE RECHANGE ORI*GINALES**
UTILIZAR SIEMPRE REPUESTOS ORIGINALES

GASPARDO

Servizio Assistenza Tecnica - After Sales Service
Servizio Ricambi - Spare Parts Service
+39 0434 695410

DEALER:

G19530831

MASCHIO GASPARDO

MASCHIO GASPARDO SpA
Registered office & Production plant
Via Marcello, 73 - 35011 Campodarsego (Padova) - Italy
Tel. +39 049 9289810
Fax +39 049 9289900
info@maschio.com
www.maschionet.com

MASCHIO GASPARDO SpA
Production plant
Via Mussons, 7 - 33075
Morsano al Tagliamento (PN) - Italy
Tel. +39 0434 695410
Fax +39 0434 695425
info@gaspardo.it

MASCHIO DEUTSCHLAND GMBH
Äußere Nürmberger Straße 5
D - 91177 Thalmässing - Deutschland
Tel. +49 (0) 9173 79000
Fax +49 (0) 9173 790079
dialog@maschio.de
www.maschio.de

MASCHIO FRANCE Sarl
1, Rue de Mérignan ZA
F - 45240 La Ferte St. Aubin
France
Tel. +33 (0) 2.38.64.12.12
Fax +33 (0) 2.38.64.66.79
info@maschio.fr

000 МАСКИО-ГАСПАРДО РУССИЯ
Улица Пушкина, 117 Б
404126 Волжский
Волгоградская область
Тел. +7 8443 515152
факс. +7 8443 515153
info@maschio.ru

MASCHIO-GASPARDO ROMANIA S.R.L.
Strada Înfrátirii, F.N.
315100 Chisineu-Cris (Arad) -România
Tel. +40 257 307030
Fax +40 257 307040
info@maschio.ro

MASCHIO-GASPARDO North America
120 North Scott Park Road
Eldridge, IA 52748 - USA
Ph. +1 563 2859937
Fax +1 563 2859938
info@maschio.us

MASCHIO-GASPARDO IBERICA
MASCHIO-GASPARDO POLAND
MASCHIO-GASPARDO UCRAINA
GASPARDO-MASCHIO TURCHIA
MASCHIO-GASPARDO CINA

Research & Development MASCHIO GASPARDO S.p.A.